United States District Court,
District of Columbia.

Jerome CANADY, M.D., and Argon Electro-Surgical Corp,
Plaintiffs.
v.
ERBE ELEKTROMEDIZIN GmbH and ERBE U.S.A,
Defendants.

Civil Action No. 96-CV-2012 (RMU)

Sept. 10, 1998.

Patentee filed suit against competitor, seeking declaratory judgment of infringement of patent for surgical coagulation device. Competitor moved for summary judgment. The District Court, Urbina, J., held that: (1) patent was not anticipated; (2) patent was not obvious; and (3) competitor's probes did not infringe patent.

Motion for summary judgment granted in part and denied in part.

5,207,675. Valid and not infringed.

Timothy R. DeWitt, Arnold & Porter, Washington, DC, Virginia Anne Whitehill, Zuckerman, Spaeder, Goldstein, Taylor & Kolker, L.L.P., Washington, DC, Fred E. Cowden, Jr., Nashville, TN (pro hac vice), James Mason Loots, Simmons & Loots, Washington, DC, for Plaintiffs.

Martin Paul Hoffman, Hoffman, Wassen & Gitler, Arlington, VA, Nate F. Scarpelli, Scott M. Gettleson, Marshall, O'Toole, Gerstein, Murray & Borun, Chicago, IL (pro hac vice), for Defendants.

OMNIBUS MEMORANDUM OPINION RESOLVING ALL PENDING MOTIONS

URBINA**, District Judge.**

I. INTRODUCTION

At issue in this action is U.S. Patent No. 5,207,675 ("the '675 patent"). The '675 patent relates to surgical devices in the field of electrosurgery. Plaintiffs and counter-defendants Jerome Canady and Argon Electro-Surgical Corporation (collectively "Canady") own the '675 patent. Defendants and counter-plaintiffs ERBE Elektromedizin GmbH and ERBE U.S.A (collectively "ERBE") manufacture and sell APC Probes 20132-070, 071, 072, and 100 ("APC Probes"). The APC Probes also relate to surgical devices in the field of electrosurgery.

Canady filed this suit seeking declaratory judgment that ERBE's APC Probes infringe claims 1 and 11-16 of

the '675 patent. ERBE asserted counterclaims alleging that the '675 patent is invalid because it was anticipated and rendered obvious by prior art not considered by the U.S. Patent and Trademark Office ("PTO"). ERBE presently moves for summary judgment seeking declaratory judgment that (1) the '675 patent is invalid and (2) its APC Probes do not infringe claims 1 and 11-16 of the '675 patent. ERBE also moves for default judgment claiming that Canady failed to answer or otherwise respond to its counterclaims. Upon consideration of the parties' submissions and the relevant law, the court denies ERBE's motion for summary judgment on invalidity, grants its motion for noninfringement, and denies its motion for default judgment.

II. THE INVENTIONS

A. Canady's '675 Patent

On July 15, 1991, Dr. Jerome Canady filed a patent application entitled "Surgical Coagulation Device." After several amendments to the initial application, the PTO approved the application and issued the '675 patent to Jerome Canady on May 4, 1993. The '675 patent is related to a coagulation device that controls or prevents blood flow in tissue for various types of incisional surgical procedures using an endoscope. Specifically, the '675 patent discloses a coagulation device using ionizable gas, such as argon, and radiofrequency current ("RF current") to cause blood coagulation (stoppage of bleeding) in the tissue. Using this device allows the ionizable gas to conduct the RF current in a gas stream to the tissue where the RF current causes blood in blood vessels of the tissue to "blow away." As a result, the blood vessels coagulate thus ceasing blood flow in the tissue. In addition, the coagulation device causes blood coagulation without physical contact between the device and tissue.

To perform this type of procedure, the '675 patent discloses a flexible tube passing through an endoscope which includes a flexible wire for conducting RF current. The flexible tube allows the ionizable gas to flow through the tube and endoscope. At the tip of the flexible tube and wire, the ionizable gas is discharged creating a gas stream that conducts the RF current from the flexible wire to the tissue which causes blood coagulation. In the '675 patent, claim 1 states the patented invention as follows:

1. A surgical tissue coagulator comprising an elongate, biocompatible, flexible tube having an open distal end and a proximal end, the tube having an external diameter of less than about 5 mm and being insertable into and maneuverable within a surgical endoscope;

means for connecting the proximal end of said tube with a source of an inert, ionizable gas so that a stream of said gas can flow through said tube and exit the distal end of said tube;

a flexible wire within said tube for conducting radio frequency current, the wire having a distal end for position adjacent the distal end of said tube, and means at the distal end of said wire for discharging an arc of radiofrequency energy away from the distal end of said wire within said stream of inert gas exiting the distal end of said tube so as to form an ionized gas stream which is capable of coagulating tissue

during endoscopic surgery within a patient, the wire having a proximal end opposite the distal end of the wire, and means for connecting the proximal end of the wire with a source of radiofrequency energy; and

a handle attached to said tube adjacent the proximal end of the tube for maneuvering said tube within said endoscope while said handle is outside said endoscope. (Col. 4, Line 67 to Col. 5, Line 25) (emphasis added).

Figure 2 of the '675 patent, as shown below, illustrates a preferred embodiment of the claimed invention. The preferred embodiment is used for endoscopic surgical procedures where a tube is inserted and passed through an endoscope to conduct the RF current and carry the ionizable gas.

***58**

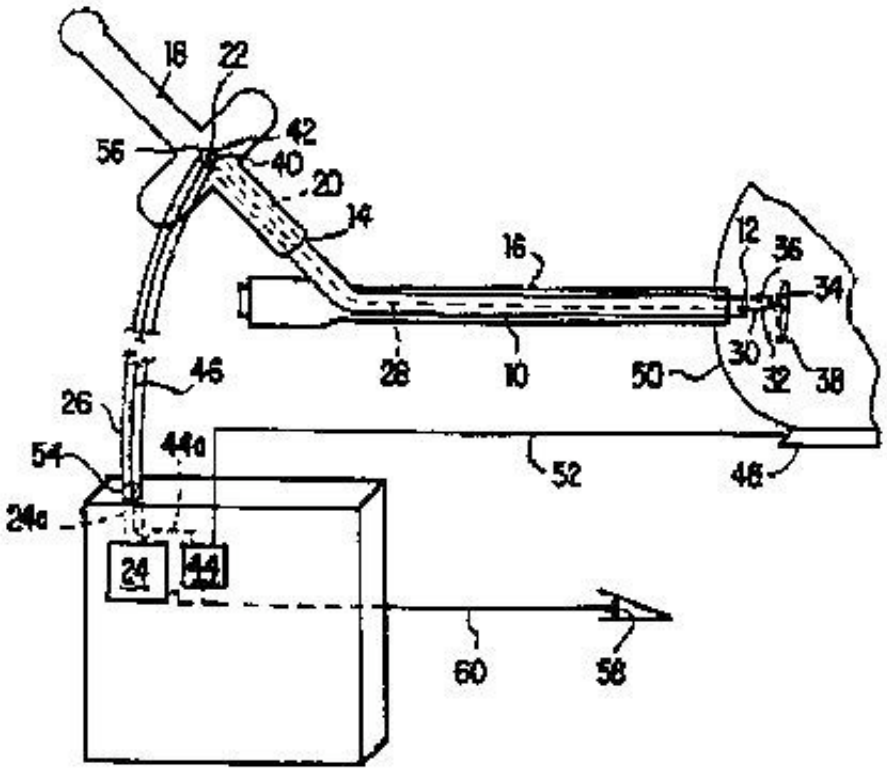

FIG. 2

The preferred embodiment describes a tube (10) connected to a handle (18) and insertable into an endoscope (16). The tube (10) provides a flexible wire (28) for conducting RF current and extends to a distal end (30). The handle (18) is located outside of the endoscope for maneuvering the tube (10) and flexible wire (28) within the endoscope (16). The handle (18) includes a coaxial inlet (56) having a gas inlet (42) and a RF inlet (22). The tube (10) connects to the coaxial inlet (56) on the handle (18). The gas inlet (42) and RF inlet (22) connect to a gas line (26) and a RF line (46), respectively, from a coaxial outlet (54) on a base unit. The base unit includes a gas source (24) and a RF generator (44) that supply the gas line (26) and RF line (46) with ionizable gas and RF current, respectively. The ionizable gas and RF current flow from the base unit to the tube (10) through the coaxial inlet (56) on the handle (18). At the distal end (30) of the flexible wire (28), the ionizable gas, such as argon, is discharged to form a gas stream and conducts the RF current to the tissue (38) to cause coagulation. The handle (18) is used to maneuver the movement of the tube (30) and wire (28) within the endoscope.

B. ERBE's APC Probes

ERBE's APC Probes serve a similar purpose as the '675 patent, which is to perform tissue coagulation using RF current and ionizable gas, such as argon, with an endoscope. The different types of APC Probes are identical in structure except for the tube diameters and length. Figure A, as shown below, illustrates ERBE's APC Probes.

***59**

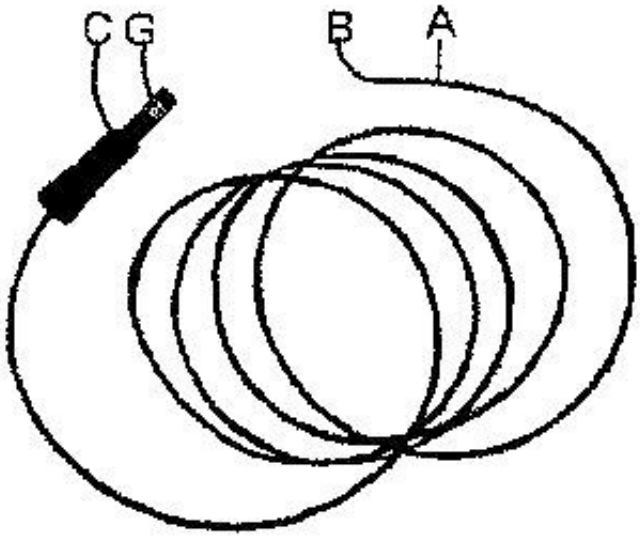

Figure A. APC Probes

The APC Probes include a flexible tube (A) with a distal end (B) insertable into an endoscope. The flexible tube (A) is capable of passing ionizable gas and also includes a thin wire for conducting RF current. In addition, the APC Probes also include a plug (C) having an insertable end (G) for connection to a coaxial adapter. The coaxial adapter is connected to a base unit which outputs ionizable gas, such as argon, and RF current to the flexible tube (A) through the insertable end (G) and plug (C). The APC Probes perform tissue coagulation in a similar manner as the '675 patent.

III. THE ALLEGATIONS

Canady asserts that ERBE's APC Probes infringe claims 1 and 11-16 of the '675 patent. Claim 1 is an independent apparatus claim upon which claims 11-12 and 15-16 are dependent. Claim 13 is an independent method claim which contains all the limitations of claim 1 and upon which claim 14 is dependent. As such, to prove infringement on claims 11-16, Canady must first show ERBE's APC Probes infringe claim 1 of the '675 patent. In claim 1, the '675 patent recites three elements (1) a "means for connecting" a tube with a source of ionizable gas, (2) "a flexible wire" contained within the tube, and (3) "a handle" for maneuvering the tube within an endoscope. (Col.1, Lines 21-24). Canady alleges the claimed elements, as recited in claim

1, read on the insertable end (G), the flexible tube (A), and the plug (C) of ERBE's APC Probes, and, therefore, the APC Probes infringe on claims 1 and 11-16 of the '675 patent. The parties do not dispute the first two elements, but disagree whether the claimed "handle" of the '675 patent reads on the accused "plug" of the APC Probes.

ERBE argues the claimed "handle" element does not read on the accused "plug" because the claimed "handle" has a specific, recited function of "maneuvering" a tube within an endoscope. ERBE asserts the accused "plug" is not used for maneuvering, but it is used to connect to a coaxial adapter which is connected to a base unit. ERBE, therefore, contends that the APC Probes do not infringe on the '675 patent. As a threshold issue, the court must first interpret the proper scope of the claimed "handle" element as recited in claim 1 of the '675 patent before deciding issues of invalidity and noninfringement for summary judgment purposes. *See* Markman v. Westview Instruments, Inc., 517 U.S. 370, 116 S.Ct. 1384, 134 L.Ed.2d 577 (1996) (noting claim interpretation is a question of law to be determined by the courts). The court must then use the construed claim to determine invalidity and noninfringement. W.L. Gore & Assoc. v. Garlock, Inc., 842 F.2d 1275, 1279 (Fed.Cir.1988) ("[h]aving construed the claims one way for determining their validity, it is axiomatic that the claims must be construed in the same way for infringement").

IV. CLAIM INTERPRETATION

[1] [2] [3] [4] In construing patent claims, the court must consider (1) the claim itself, (2) the specification, and (3) the prosecution history of the patent application (if introduced). Vitronics Corp. v. Conceptronic, Inc., 90 F.3d 1576, 1582 (Fed.Cir.1996). Words in a claim must be given their plain meaning unless another definition is specified. In re Zletz, 893 F.2d 319, 321-22 (Fed.Cir.1989). The court, however, can neither narrow nor broaden the scope of the claim to give the patent owner something different than what he intended. E.I. du Pont de Nemours & Co. v. Phillips Petroleum Co., 849 F.2d 1430, 1433 (Fed.Cir.1988). The appropriate starting point is with the specific language of the claims, Phonometrics, Inc. v. Northern Telecom Inc., 133 F.3d 1459, 1464 (Fed.Cir.1998), and all words in a claim must be considered. In re Wilson, 57 C.C.P.A. 1029, 424 F.2d 1382, 1385 (C.C.P.A.1970).

[5] In claim 1 of the '675 patent, the "handle" element is recited as "a handle attached to said tube adjacent the proximal end of the tube for maneuvering said tube within said endoscope while said handle is outside said endoscope." (Col. 5, Lines 21-24) According to claim 1, the recited "handle" has the purpose of "maneuvering" a tube within an endoscope. This purpose of "maneuvering" is clearly supported in the specification. More particularly, in the detailed description of the specification of the '675 patent, a preferred embodiment of the claimed invention discloses the "handle" as "a [h]andle (18) [which] is provided for maneuvering tube (10) within an endoscope (16) (shown in Fig. 2) while handle (18) is outside the endoscope." (Col. 3, Lines 2-5).

[6] Canady contends that the prosecution history of the '675 patent application shows the novelty of the '675 patent is related to the use of an "ionizable gas" and in particular, argon gas, for endoscopic electrosurgery. Canady further asserts that the claimed "handle" element should be interpreted to cover any "handle" element which is positioned outside of an endoscope. This contention is unavailing because the court cannot interpret the claimed "handle" element to cover all "handle" elements positioned outside of an endoscope, but must interpret the explicit language of the claims which clearly recites a "handle" being further limited by its function of "maneuvering" a tube within an endoscope. *See* In re Wilson, 424 F.2d at 1385 (noting that the court cannot ignore the specific language in a claim). Furthermore, the court must construe patent claims consistently with the specification and the preferred embodiment. *See* Vitronics, 90 F.3d at 1583; *See*

also In re Application of Barr, 58 C.C.P.A. 1388, 444 F.2d 588, 592-93 (C.C.P.A.1971) (noting that the court should give the claims the broadest reasonable interpretation consistent with the specification). Here, both the claim language and the specification describe a "handle" as having the purpose of "maneuvering" a tube within an endoscope. Moreover, adopting the ordinary meaning of the term "handle" dictates the court's conclusion that the claimed "handle" is "a part to be held or operated with the hand." In re Zletz, 893 F.2d at 321-22. FN1 The clear language of the claim further compels the court's conclusion that the claimed "handle" is further limited by its function "for maneuvering" a tube within an endoscope. Accordingly, the court concludes that the claimed "handle" of the '675 patent is limited by its recited function of "maneuvering" a tube within an endoscope. Armed with this claim construction, the court proceeds to determine the validity of the '675 patent and ascertain whether ERBE's APC Probes infringe claims 1 and 11-16 of the '675 patent.

FN1. *See Webster's New Riverside University Dictionary* 562 (1988).

V. DISCUSSION: INVALIDITY AND NONINFRINGEMENT

A. Standard of Review

[7] Summary judgment is appropriate for suits involving claims of patent invalidity and noninfringement. *See* D.M.I., Inc. v. Deere & Co., 755 F.2d 1570, 1573 (Fed.Cir.1985). The court can properly grant summary judgment only "if the pleadings, depositions, answers to interrogatories, and admissions on file, together with the affidavits, if any, show that there is no genuine issue as to any material fact and that the moving party is entitled to a judgment as a matter of law." Fed.R.Civ.P. 56(c); Celotex Corp. v. Catrett, 477 U.S. 317, 322-32, 106 S.Ct. 2548, 91 L.Ed.2d 265 (1986). The moving party for summary judgment has the burden of demonstrating that there is no genuine issue as to any material fact. Celotex, 477 U.S. at 322, 106 S.Ct. 2548. The party opposing a motion for summary judgment may not rely on mere allegations or denials, but must set forth specific facts showing that there is a genuine issue for trial. Anderson v. Liberty Lobby, Inc., 477 U.S. 242, 248, 106 S.Ct. 2505, 91 L.Ed.2d 202 (1986). The evidence presented by the non-moving party is to be believed, and all justifiable inferences are to be drawn in the non-moving party's favor. Celotex, 477 U.S. at 325, 106 S.Ct. 2548. Absent evidence sufficient to permit a jury to return a verdict for the non-moving party, summary judgment may be granted. Anderson, 477 U.S. at 249, 106 S.Ct. 2505.

B. The '675 Patent is Valid

ERBE challenges the validity of the '675 patent based on prior art that allegedly was not considered by the PTO. Specifically, ERBE alleges claims 1 and 11-16 of the '675 patent are (1) anticipated by U.S. Patent No. 5,122,138 ("the Manwaring patent"); (2) rendered obvious by the Manwaring patent in combination with U.S. Patent No. 5,084,054 ("the Bencini patent"); and (3) rendered obvious by the alleged "prior art" admissions in the '675 patent with the German Patent Publication DE3508784A1 ("the German patent").

[8] [9] [10] An issued patent is presumed valid. *See* 35 U.S.C. s. 282. To overcome this presumption, a challenger of an issued patent bears a heavy burden of showing invalidity by clear and convincing evidence. Checkpoint Sys., Inc. v. United States Int'l Trade Comm'n, 54 F.3d 756 (Fed.Cir.1995). The court may grant a motion for summary judgment on invalidity if the challenger supports its claims of invalidity by indisputable facts and law. Paragon Podiatry Lab. v. KLM Laboratories, 984 F.2d 1182, 1186 (Fed.Cir.1993); *see also* Ryko Mfg. Co. v. Nu-Star, Inc., 950 F.2d 714 (Fed.Cir.1991). The court need not defer to the rationale used by the PTO when a challenger to the patent presents "prior art" not considered by

the PTO. American Hoist & Derrick Co. v. Sowa & Sons, 725 F.2d 1350, 1359-60 (Fed.Cir.1984). For the reasons stated below, the court concludes that ERBE has failed to demonstrate by clear and convincing evidence that claims 1 and 11-16 of the '675 patent are invalid.

1. Anticipation by Prior Art

[11] ERBE asserts claims 1 and 11-16 of the '675 patent are invalid because they are anticipated by the Manwaring patent. For a patent to be valid it must not have been anticipated by prior art, that is, not previously known or used by others. *See* 35 U.S.C. s. 102. A device that is anticipated by prior art is not new, and therefore not patentable. Id. To rule a patent invalid because of anticipation, the court must find all of the elements and limitations of the claims in the challenged patent are also disclosed within a single prior art reference. Scripps Clinic & Research Found. v. Genentech, Inc., 927 F.2d 1565, 1576 (Fed.Cir.1991).

a. Claims 1 and 11-16 are not Anticipated by the Manwaring Patent

[12] Claims 1 and 11-16 are not anticipated by the Manwaring patent. The Manwaring patent, entitled "Tissue Vaporizing And Method For An Endoscope," was filed on November 28, 1990, and issued to Kim H. Manwaring on June 16, 1992. The Manwaring patent is related to an endoscopic surgical device which uses radio frequency output ("RF output") and "pressurized fluid" to perform tissue dissection and coagulation. Figures 2 and 4 of the Manwaring patent show preferred embodiments of the surgical device, including a Tuohy Borst Adapter (35), Endoscope (10), and Tube (12) including a Conductor (34) having a flexible Working End (16). The Tuohy Borst Adapter 35 connects to the Endoscope (10) and receives RF output and pressurized fluid. The Tuoghy Borst Adapter 35 controls the flow of the pressurized fluid to the Endoscope (10) and is also positioned outside the Endoscope (10). The Tube (12) connects to the Endoscope (10) which receives RF output and pressurized fluid through the Endoscope (10). The Tube (12) carries the pressurized fluid and conducts the RF output through the Conductor (34) to the flexible Working End (16). At the Working End (16), an operator can adjust the Working End (16) to output the pressurized fluid and RF output, where the RF output creates a spark to vaporize tissue. The output of the pressurized fluid enhances this process by purging or clearing vapor away (steam bubbles) from the view of an operator using the device.

It is undisputed that the Manwaring patent is considered prior art because it was filed before the '675 patent. *See* 35 U.S.C. s. 102(e). In order for the Manwaring patent to anticipate the '675 patent as prior art, however, ERBE must show by clear and convincing evidence that the Manwaring patent discloses every limitation of the claimed invention of the '675 patent. *See* In re Schreiber, 128 F.3d 1473, 1477 (Fed.Cir.1997). Here, ERBE fails to satisfy this high standard. ERBE relies on the Tuoghy Borst Adapter (35) of the Manwaring patent to teach the claimed "handle" element of claim 1 of the '675 patent positioned outside an endoscope. ERBE admits the Manwaring patent fails to teach that the Tuoghy Borst Adapter (35) performs the function of "maneuvering" a tube within an endoscope. FN2 Accordingly, because the Tuoghy Borst Adapter (35) does not teach the claimed limitation of a "handle" with the capability of "maneuvering" a tube within an endoscope, the court concludes that the Manwaring patent does not anticipate claims 1 and 11-16 of the '675 patent as prior art.

FN2. Defendant's Motion for Summary Judgment of Invalidity at 11.

2. The '675 Patent **is not Rendered Obvious**

[13] [14] [15] [16] [17] ERBE asserts that claims 1 and 11-16 are invalid because they are rendered obvious by the (1) the combination of the Manwaring patent and the Bencini patent, and (2) the "prior art" admissions in the '675 patent in combination with the German patent. For a patent to be valid, the subject matter claimed must also be nonobvious. 35 U.S.C. s. 103(a). In other words, a patent is not valid if "the differences between the subject matter sought to be patented and the prior art are such that the subject matter as a whole would have been obvious at the time the invention was made to a person having ordinary skill in the art to which said subject matter pertains." 35 U.S.C. s. 103(a). Under s. 103(a), a determination of obviousness is a legal question for the court. As such, the court must determine (1) the scope of the prior art; (2) the level of ordinary skill in the art; (3) the differences between the claimed invention and the prior art; and (4) whether secondary considerations of nonobviousness exist. *See* Graham v. John Deere Co., 383 U.S. 1, 17-18, 86 S.Ct. 684, 15 L.Ed.2d 545 (1966). Based on these inquires, the court must then determine whether the claimed invention as a whole would have been obvious to a person of ordinary skill in the art at the time the invention was made. In re Mayne, 104 F.3d 1339, 1341 (Fed.Cir.1997). This determination requires the court to adhere to the following analysis: (1) the claimed invention must be considered as a whole; (2) the references must be considered as a whole and must suggest the desirability and thus the obviousness of making the combination; (3) the references must be viewed without the benefit of impermissible hindsight vision afforded by the claimed invention and (4) reasonable expectation of success to one of ordinary skill. *See* Hodosh v. Block Drug Co., 786 F.2d 1136, 1143 n. 5 (Fed.Cir.1986); *see also* In re Vaeck, 947 F.2d 488, 493 (Fed.Cir.1991). More particularly, when a party asserts invalidity of a patent based on obviousness using a combination of prior art references, the party "bears the burden of showing some teaching or suggestion in these references which support their use in combination." Ashland Oil, Inc. v. Delta Resins & Refractories, Inc., 776 F.2d 281, 293 (Fed.Cir.1985). Furthermore, the combination of prior art references must still collectively teach all of the claimed elements of the invention. *See* In re Dow Chemical Co., 837 F.2d 469, 473 (Fed.Cir.1988).

a. Claims 1 and 11-16 are not Rendered Obvious by the Manwaring Patent and the Bencini Patent

[18] Claims 1 and 11-16 are not rendered obvious by the combination of the Manwaring and the Bencini patents. The Bencini patent, entitled "Surgical Gripping Instrument," was filed on March 5, 1990, and issued to Robert F. Bencini on January 28, 1992. FN3 The Bencini patent relates to a surgical gripping instrument for controlling a "wire" or "snare" to grip tissue for various types of surgical procedures. ERBE concedes that the combination of the Manwaring and the Bencini patents fails to show the claimed limitations of (1) the use of an inert, ionizable gas and (2) a handle for maneuvering a tube within an endoscope. ERBE, however, asserts that it would have been obvious to one of ordinary skill to combine the Bencini patent with the Manwaring patent to teach the claimed invention as recited in claim 1 of the '675 patent. Specifically, ERBE contends that it would have been obvious to combine the teachings of the gripping instrument taught by the Bencini patent with the teachings of the Tuoghy Borst Adapter (35) taught by the Manwaring patent to teach the claimed "handle" element of claim 1 of the '675 patent. ERBE also admits that the combination does not specifically teach using the claimed "ionizable gas," but asserts that "pressurized fluid" taught by the Manwaring patent is similar to "ionizable gas." Here, the court concludes that (1) neither the Manwaring patent nor the Bencini patent suggests their combination and (2) even if there was a suggestion for their combination, the combined references still do not teach all of the elements of the claimed invention as recited in claim 1 of the '675 patent, i.e., the use of "ionizable gas."

FN3. Like the Manwaring patent, the Bencini patent is prior art because it was filed before the '675 patent. *See* 35 U.S.C. s. 102(e).

[19] First, the mere fact that prior art references can be combined or modified does not render the resultant combination obvious unless the prior art references also suggest the desirability of the combination. *See* In re Mills, 916 F.2d 680 (Fed.Cir.1990). The Manwaring patent discloses a surgical device to vaporize tissue using RF output and pressurized fluid that are discharged from a flexible Working End (16). The problem solved by the Manwaring patent is to improve maneuverability during various surgical procedures by providing a more flexible vaporizing device that includes a flexible tube having a flexible Working End (16). The flexible Working End (16) is maneuvered manually by an operator. The Bencini patent, on the other hand, discloses a gripping instrument that moves a wire or snare to grasp tissue during various types of surgical procedures. This apparatus is directed to reducing the amount of vertical movement of a Slide (30) to control a Wire (53) and Snare (59). Thus, the main difference between the Manwaring patent and the Bencini patent is that the Manwaring patent provides a flexible device where an operator can easily maneuver a Working End (16) to perform tissue vaporization. By contrast, the Bencini patent reduces the amount of movement of a Slide (30) to allow for easier use. As such, for the combination of the Manwaring and Bencini patents to render the '675 patent obvious, ERBE must provide clear and convincing evidence to suggest that it would have been obvious to one of ordinary skill in the art to combine these two patents. ERBE, however, relies on impermissible hindsight to suggest the combination of the Manwaring and Bencini patents. Specifically, because the Manwaring patent and the Bencini patent are related to solving different problems, their combination is not suggested, and, therefore, the court concludes that ERBE has not presented clear and convincing evidence that the combination is rendered obvious by one of ordinary skill in the art.

[20] Second, even if the Manwaring patent is combinable with the Bencini patent, there is a material factual dispute as to whether the combination teaches all of the claimed limitations of claim 1. The combination of prior art references that renders a claimed invention obvious to one of ordinary skill must also teach all of the claimed limitations. *See* In re Dow Chemical, 837 F.2d at 473. ERBE has failed to demonstrate that the combination of the Manwaring and Bencini patents teaches all of the claimed limitations as recited in claim 1. Specifically, Canady asserts that the combination of the Manwaring patent and the Bencini patent fails to teach the use of "ionizable gas" as recited in claim 1 of the '675 patent. ERBE, however, argues the use of "pressurized fluid" taught by the Manwaring patent is similar to ionizable gas. Canady contests the assertion that "fluid" is equivalent to gas. Under these facts, there is a material factual dispute as to whether "pressurized fluid" is ionizable gas, therefore, the court cannot enter summary judgment for ERBE. Moreover, ERBE has failed to set forth clear and convincing evidence that the combination of the Manwaring patent and the Bencini patent teaches all of the claimed limitations of claim 1. Accordingly, construing factual inferences in the light most favorable to Canady, the court concludes that claims 1 and 11-16 are not rendered obvious by the combination of the Manwaring patent and the Bencini patent.

b. Claims 1 and 11-16 are Not Rendered Obvious by the Prior Art Admissions in the '675 Patent **and the German Patent**

[21] Claims 1 and 11-16 are not rendered obvious by the prior art admissions in the '675 patent and the German Patent. ERBE relies on the "Description of the Background Art" section ("Background Art section") of the '675 patent (Col. 1, Lines 8-49) in combination with the German patent to demonstrate that the '675 patent is obvious. Any statement made in a patent asserting prior art is binding on the patentee in determining the validity of the patent. *See* Constant v. Advanced Micro-Devices, Inc., 848 F.2d 1560, 1570 (Fed.Cir.1988). The Background Art section of the '675 patent describes that argon beam coagulators were well known in the art for using ionizable gas, such as argon, and radiofrequency current to cause tissue

coagulation. (Col. 1, Lines 35-46). The Background Art section refers to various medical journal articles that predate the '675 patent to describe argon beam coagulators. (Col. 1, Lines 35-46). The use of ionizable gas is therefore considered prior art for invalidity purposes. *See* 35 U.S.C. s.s. 102(a), (b).

Here, ERBE relies on the prior art contained in the Background Art section of the '675 patent in conjunction with the German Patent to teach the claimed limitations of claim 1 of the '675 patent as being obvious to one of ordinary skill. ERBE concedes the prior art in the Background Art section of the '675 patent alone is deficient in showing, among other elements, the claimed "handle" element as recited in claim 1. ERBE, however, contends that it would have been obvious to one of ordinary skill to combine the Background Art section with the German patent to teach the "handle" element positioned outside of an endoscope for the purpose of "maneuvering" a tube within the endoscope. The German patent, entitled "Equipment For Endoscopic Papillotomy," was filed on March 21, 1985, and later issued to ENDO-FLEX Instruments GmbH. The German patent is considered prior art in relation to the '675 patent. *See* 35 U.S.C. s.s. 102(a), (b). The German patent relates to a holder for a flexible catheter tube used to perform various surgical cutting procedures. Figure 1 of the German patent discloses a holder (10) connected to a flexible catheter tube (12). The flexible catheter tube (12) includes a flexible needle and a cutting wire used to cut tissue during various surgical procedures. The holder (10) controls the flexible needle and the cutting wire within the catheter tube (12). Thus, the holder (10) not only allows an operator to control the needle and cutting wire within the flexible catheter tube (12), but also prevents unintentional damage to tissue by the needle and cutting wire. FN4 ERBE argues that one of ordinary skill would have combined the teachings of the holder (10) of the German patent with the teachings of the prior art contained in the Background Art section to teach the claimed "handle" of claim 1 of the '675 patent. This argument is unpersuasive.

FN4. *See* Defendants Motion for Summary Judgment of Invalidity, Ex. 15, at 6. The English translation of the German patent.

[22] [23] ERBE cannot rely on impermissible hindsight contained in Canady's '675 patent. Hodosh, 786 F.2d at 1143 n. 5. A challenger of an issued patent for obviousness bears the burden, not the court, of showing some teaching or suggestion in the prior art to support their combination. In re Vaeck, 947 F.2d at 493. Furthermore, the challenger must support the combination with clear and convincing evidence. *Id*. In the instant case, ERBE has failed to provide by clear and convincing evidence of a suggestion to combine the prior art contained in the Background Art section of the '675 patent with the German patent. Similar to the Bencini patent, the German patent provides a holder for easier operability and to prevent unintentional contact with the tissue during various surgical procedures. Specifically, the German patent discloses an apparatus which reduces the amount of manual motion by an operator while performing various incisional surgeries. The German patent states, "[t]he task of the invention is [to] provide equipment ... which can be operated more simply and with a higher safety to the patient." Although both the '675 patent and the German patent disclose a methodology that prevent the apparatus's unintentional contact with tissue, the '675 patent teaches using a handle positioned outside an endoscope to avoid unnecessary contact with tissue. By contrast, the German patent teaches the reduction manual movement of operating a holder to avoid unintentional contact with the tissue. Thus, ERBE cannot rely on Canady's own teaching in the '675 patent to combine with the holder of the German patent to teach the '675 patent. This is impermissible hindsight. Accordingly, the court concludes that claims 1 and 11-16 are not rendered obvious by the combination of the admitted prior art of the '675 patent with the German patent. The court, therefore, denies ERBE's motion for summary judgment on invalidity of the '675 patent.

C. The APC Probes Do Not Infringe the '675 Patent

[24][25][26][27] Canady alleges that ERBE's APC Probes infringe claims 1 and 11-16 of the '675 patent. Although patent infringement analysis usually involves both issues of law and questions of fact, summary judgment for noninfringement may still be proper. Phonometrics, Inc. v. Northern Telecom Inc., 133 F.3d 1459, 1463 (Fed.Cir.1998). "A good faith dispute about the meaning and scope of asserted claims does not, in and of itself, create a genuine dispute to preclude summary judgment." *Id*. (internal citation omitted). After the process of claim interpretation, if the evidence is such that no reasonable jury could determine two elements to be equivalent, the court must enter grant summary judgment for the movant. Warner-Jenkinson Co. v. Hilton Davis Chem. Co., 520 U.S. 17, 117 S.Ct. 1040, 137 L.Ed.2d 146 (1997). In determining whether a patent claim has been infringed requires a two-step analysis. First, the court must construe the scope and meaning of the claim. Serrano v. Telular Corp., 111 F.3d 1578, 1582 (1997). Second, the court then must compare the properly construed claim with the accused device. *Id*. In this case, the court has construed the scope and meaning of the claimed "handle" element in claim 1 of the '675 patent as having a limitation of "maneuvering" a tube within an endoscope. Against this background, the court must then compare the accused device (the APC Probes' plug) to the properly construed claim (the '675 patent's handle) to determine whether there exists (1) literal infringement or (2) infringement by equivalents. *See* Warner-Jenkinson, 520 U.S. at ----, 117 S.Ct. at 1049; Pennwalt Corp. v. Durand-Wayland, Inc., 833 F.2d 931, 935 (Fed.Cir.1987). Under this two-prong infringement test, the court concludes the defendants APC Probes do not infringe claims 1 and 11-16.

1. ERBE's APC Probes Do Not Literally Infringe the '675 Patent

[28][29] The APC Probes do not literally infringe the '675 patent. To prove literal infringement, every limitation of the allegedly infringed patent claim must be shown to exist in the accused product. Hormone Research Foundation, Inc. v. Genentech Inc., 904 F.2d 1558, 1562 (Fed.Cir.1990). Here, ERBE contends the accused "plug", unlike the "handle," is used to connect to an adapter and not for the purpose of "maneuvering" a tube within an endoscope. Canady has not disputed this contention. As such, the limitations of the claimed "handle" do not cover the accused "plug." Accordingly, the court concludes that there is no literal infringement of the '675 patent by the APC probes.

2. The APC Probes Do Not Infringe the '675 Patent **Under The Doctrine of Equivalents**

[30][31][32] The APC Probes do not infringe Claims 1 and 11-16 under the doctrine of equivalents. If the accused product does not literally infringe, it may still infringe under the doctrine of equivalents if the differences between the claimed invention and the accused device are insubstantial. *See e.g.,* Pennwalt, 833 F.2d at 934-35. To prove infringement under this doctrine, the accused product must (1) perform substantially the same function, (2) in substantially the same way, and (3) achieve substantially the same result. *Id*. In this case, although the accused "plug" may cover the structural limitations of the recited "handle" in claim 1, the accused "plug" does not perform the same function as the claimed "handle" element. The accused "plug" is used to connect to an adapter while the claimed "handle" is used to maneuver a tube within an endoscope. The function of the claimed "handle" is explicitly detailed in the specification section of the '675 patent. As such, the claimed "handle" does not cover the accused "plug." The court, therefore, grants ERBE's motion for summary judgment on noninfringement because the APC Probes do not infringe claims 1 and 11-16 of the '675 patent under the doctrine of equivalents.

VI. Conclusion

For the reasons stated above, the court denies ERBE's motion for summary judgment on invalidity and grants its motion for summary on noninfringement. Because the court has resolved the summary judgment motion on its merits, the court denies ERBE's motion for default judgment as moot. Accordingly, the court dismisses the above-captioned action with prejudice.

D.D.C.,1998.
Canady v. Erbe Elektromedizin GmbH

Produced by Sans Paper, LLC.