METHOD OF FORMING AN OPTICAL FIBER DEVICE

BACKGROUND OF THE INVENTION

This invention relates to the field of image magnification and display and, more particularly, to a fiber optics display panel and a method of making same.

Fiber optic image transferring, display, and magnification systems are known in a variety of forms. These systems typically employ large numbers of elongated filaments or strands of optically transmissive material which operate on a principle of total internal reflection. Light to be carried from one location to another enters the filament at one end and is internally reflected therein, even around fairly severe bends, with reasonably high efficiency so that most of the light is available at the exit end of the filament.

It is known that image magnification can be achieved by bunching the ends of a large number of optical fibers relatively closely together at one location to form an image input plane and separating the spacing between the other ends of the fibers at another reference plane, called the image exit plane. In this manner, the image can be "spread out" or magnified by an amount which depends on the ratio between the fiber spacings in the input plane and the fiber spacings in the output plane. Systems of this type are illustrated for example, in the U.S. Pat. Nos. 3,043,910; 3,402,000; 3,853,658; and 3,909,109. Systems of this general type can be provided with light absorbing material between the fiber ends in the output plane so as to enhance contrast. These systems are also advantageous in that they are essentially failure-free and have unlimited life. However, they tend to be relatively cumbersome since significant room is generally required to allow the optical filaments or fibers to spread out in a mechanically acceptable manner. Also, manufacturing cost of fiber optic magnification panels is a limiting factor on practicality. In particular, since large numbers of fibers are employed, it is important that the techniques of manufacture be relatively repeatable and accurate and not wasteful of material. The manufacturing process should also, ideally, not involve an unduly large number of manufacturing steps, and techniques which involve manipulation of individual fibers should ideally be avoided. However, it has been found in the past that the achievement of the most desirable geometries requires manufacturing techniques that tend to be expensive.

SUMMARY OF THE INVENTION

The present invention is directed to an optical display apparatus, or fiber optics magnification panel, and a method of making same. The display apparatus in accordance with the invention comprises a light input surface defined by one end of each of a multiplicity of elongated optical carrier strands, e.g. fiber optic strands, the one ends being arranged in a relatively closely spaced array of rows and columns. A light output surface is substantially perpendicular to the light input surface and is defined by the other ends of the strands, the other ends being arranged in a relatively remotely spaced configuration of rows and columns. Each column of strands extends rearwardly from the input surface to a depth which depends upon the column's position in the order of columns. Each strand of a column bends sidewardly at its point of greatest depth to an orientation which is substantially parallel to the input surface. The strands of each column are of different length with each strand of a column terminating at a transverse position which depends upon its row order in the column, such that the other ends of the strands of the columns of the input surface define columns of the output surface which are at less than a right angle with respect to the columns of the input surface. The result is a compact wedge-shaped display apparatus wherein the output surface array has its top row at a relative height substantially corresponding to the relative height of the top row of the input surface array and the output surface array has a bottom row at a relative height which substantially corresponds to the relative height of the bottom row of the input surface array.

In the preferred embodiment of the invented apparatus, the defined other ends of the optical carrier strands are bent so as to be substantially normal to the light output surface.

In accordance with an embodiment of the method of the invention, there are defined a number of steps by which a display apparatus of the type described can be fabricated without an unduly large number of manufacturing steps or undue manipulation of individual fibers. A plurality of substantially parallel relatively closely spaced optically conducting elongated strands, such as fiber optic strands, are wrapped about a spacer element. At least one additional spacer element is then positioned over the previously wrapped strands and the plurality of strands is rewrapped over the at least one additional spacer element in spiral fashion. The operation of positioning an additional spacer element over the previously wrapped strands and rewrapping the strands over the additional spacer element is then repeated a desired number of times. The resultant spirally wound construction is then severed substantially along the plane of the first-mentioned spacer element, and a resultant portion of this severing operation is angularly severed to form a pair of wedge-shaped display panels. In the preferred embodiment of the invention, the step of positioning at least one additional spacer element over the previously wrapped strands comprises positioning a pair of spacer elements on opposite sides of the previously wrapped strands. In this embodiment, the severing of the spirally wound construction substantially along the plane of the first-mentioned spacer element yields two substantially similar portions, and when these are angularly severed the result is four wedge-shaped display panels. The preferred embodiment of the method further comprises the steps of shifting the relative orientations of portions of each strand overlaying a spacer element during or after the wrapping sequence. This results in the ends of the strands at the light output surface of the panel being substantially normal to said light output surface.

Further features and advantages of the invention will become more readily apparent from the following detailed description when taken in conjunction with the accompanying drawings.

BRIEF DESCRIPTION OF THE DRAWINGS

FIG. 1 is an elevational perspective view of the display apparatus in accordance with an embodiment of the invention.

FIG. 2 is a cross-sectional view as taken through a section defined by the arrows 2—2 of FIG. 1.

FIG. 3 is a diagramatical view of some of the strands of the embodiment of FIG. 1 and is useful in understanding the configuration of the strands.

FIGS. 4A through 4E illustrate a method of making a display apparatus in accordance with the embodiment of the invention.

FIGS. 5A through 5C illustrate a method of making a display apparatus in accordance with an embodiment of the invention.

DESCRIPTION OF THE PREFERRED EMBODIMENT

Referring to FIG. 1, there is shown an optical display apparatus in accordance with an embodiment of the invention. The display apparatus 10 includes a light input surface 20 defined by one end 31 of each of a multiplicity of elongated optical carrier strands 30, such as fiber optic strands, the ends 31 being arranged in a relatively closely spaced array of rows and columns. In the present embodiment, the light input surface 20 is substantially planar, although it will be understood that this surface could vary to some extent from a planar configuration, such as to conform to the shape of a device from which an image is being transferred. A light output surface 40, substantially perpendicular to the light input surface 20, is defined by the other ends 41 of the fiber optic strands 30. The ends 41 are seen to be arranged in a relatively remotely spaced array of rows and columns. The fiber optic strands of the display apparatus 10 are disposed in a supportive material 50 the nature of which will be described further hereinbelow. In the figures the dashed lines generally indicate paths of the strands and dotted lines generally indicate the presence of array elements omitted from the drawings for illustrative clarity.

To better understand the configuration of the embodiment of FIG. 1, consider the leftmost column of strands of the input surface 20, this column being referred to as column 1 of the input surface. Each strand of this column of strands extends rearwardly to a depth (the term "depth" being with respect to the input surface 20) which is approximately defined by the rearmost edge of the output surface 40 (see FIG. 3). The other ends of the strands of column 1 define a column designated 1' in the array of the output surface 40. FIG. 2 is a cross section showing the strands of column 1 at about their point of rearmost operation, and it can be seen that each strand bends sidewardly at its point of greatest depth to an orientation which is substantially parallel to the input surface 20, the other ends of these strands constituting the column 1' of the output surface array. (The columns of the output surface are designated as "columns" due to their relationship with the columns of the input surface. To view them as columns in FIG. 1, the figure can be turned sideways such that column 1' is on the right.)

The next column of strands of the input surface, designated as column 2, extends rearwardly to a depth slightly less than the depth to which the column 1 strands extend, and, as before, each of these strands bends sidewardly at its point of greatest depth to an orientation which is substantially parallel to the input surface. Thus it is seen that each column of strands extends rearwardly from the input surface 20 to a depth which depends upon the column's position in the order of columns; viz., column 1 extending rearwardly by the greatest amount, column 2 extending rearwardly by the next greatest amount, ... and the last column, designated column *n*, extending rearwardly the smallest amount.

It is seen from the above that each strand of a column bends sidewardly at its point of greatest depth to an orientation which is substantially parallel to the input surface. The strands of each column are of different length, with each strand of a column terminating at a transverse position which depends upon its row order in the column, such that the other ends (41) of the strands of the columns define columns of the output surface which are at less than a right angle with respect to the columns of the input surface, yielding a wedge-shaped panel. This is illustrated, for example, in FIG. 2 wherein it is seen that the top strand of column 1 terminates at a lesser transverse (or sideward) position than the second-from-the-top strand of column 1 which, in turn, terminates at a lesser transverse position than the third-from-the-top strand of column 1, etc. Accordingly, with each strand of a column terminating at a transverse position which depends upon its row order in the column, the elevation of the light output surface varies uniformly to yield a compact wedge-shaped display panel.

FIGS. 4A–4E illustrate the steps of an embodiment of a method in accordance with the invention for making a display panel of the type described in conjunction with FIG. 1. In accordance with the invented method, a plurality of relatively closely spaced optically conducting elongated strands, such as fiber optic strands in parallel configuration, are utilized. Since substantial lengths of these strands are employed, it is convenient to prepare a "ribbon" 101, such as is shown in FIG. 4A, which comprises a multiplicity of strands 30 in uniformly spaced parallel relationship supported on a carrier 102. The ribbon may be made available on a spool or in any other form from which substantial lengths thereof can be readily removed.

The ribbon 101 of fiber optic strands is wrapped about a relatively flat spacer element 110, as shown in FIG. 4B. In the embodiment of FIG. 4, this and subsequent wrapping operations are achieved by rotating the spacer element 110, which serves as a rotating platen, about an axis Z. It will be understood, however, that the wrapping operations should alternately be performed by moving the source of ribbon, such as a ribbon spool, in spiral fashion, around the spacer element. After the ribbon has been wrapped once around the spacer element 110, a suitable encasing or binder material, such as a plastic or resin, may be disposed on and between the strands 30. Additional relatively flat spacer elements are then positioned over the previously wrapped strands, the spacer element 111 being positioned over one exposed surface of the ribbon 101, and a spacer element 112 being positioned over the other exposed surface of the ribbon 101. The strands are then rewrapped over the additional spacer elements, such as by effecting an additional revolution of the platen 110 (FIG. 4C). The steps of adding additional spacer elements and subsequent spiral wrapping are then repeated a desired number of times to obtain a construction as is shown in side view in FIG. 4D. The construction is next severed along the plane of the first spacer element 110, as indicated by the arrows 4E—4E in FIG. 4D. Two identical portions, one of which is shown in FIG. 4E, are obtained. In the present embodiment, the platen 110 is reusable and would typically be removed before or during the severing of the construction of FIG. 4D so as to leave the groove designated 105 in FIG. 4E. In such case, before the additional wrapping of FIG. 4B, a pair of spacers may be positioned on opposite sides of the platen 110 and bound to the first wrapped strands, and

these spacers will comprise the material on the wall of the groove 105 of each of the two portions of the severed construction. Each portion resulting from the severing of the construction of FIG. 4D, as shown in FIG. 4E, in then angularly severed along the section indicated by arrows 1—1 of FIG. 4E. This severing operation, which can be further visualized from the broken lines of FIG. 3, results in a pair of wedge-shaped display panels as originally shown in FIG. 1.

The distances between the strand ends of the light output surface array are designated S_x and S_y, as labeled in FIG. 1. The spacing S_x is determined by the thickness of the spacer elements plus the fiber thickness. The spacing S_y can be seen to be determined from

$$S_y = M \cdot W/N$$

where W is the width of the ribbon of strands, M is the magnification factor, M·W is the length of the spacer element, and N is the number of strands in the ribbon. The magnification factor M, i.e. the ratio between the spacer element length and the ribbon width, is selected to achieve a desired degree of magnification. In one embodiment of the invention, a black paper having a thickness of M times the thickness of the ribbon is employed as the spacer elements, so as to achieve a magnification M in the S_x direction. The use of a black material between the strands in the ribbon, as well as for the spacer material, facilitates the viewing of a magnified image in a relatively high ambient environment, since the strand output ends are surrounded by a larger light-absorbing, non-reflecting area which keeps ambient illumination from reaching the viewer of a displayed image. As noted, during manufacture, a suitable binder may be employed between the wrapped layers and then set or cured by heating prior to severing the construction. After the severing operations, each resultant display panel can be finished by suitable polishing, varnishing, or the like.

As seen in FIG. 2, the ends of the fiber optic strands at the output surface are not normal to the output surface itself. If the strands have very small diameters, the light emanating from them will be distributed relatively isotropically. However, if relatively large strands are utilized, it may be desired to orient the ends of the strands so that they are substantially perpendicular to the output surface. One way of achieving this is to utilize spacer elements that have a diagonally oriented gap, as shown in FIG. 5A, the gap corresponding to the position of the severing plane 1—1 of FIG. 4E. Once the ribbon 101 has been wrapped over the spacer element, the two segments of the spacer element, labeled 120A and 120B, are shifted slightly along the diagonally oriented reference, as represented by the arrows 125 and 126 in FIG. 5B. The magnitude of the shift is sufficient to orient the strands in the gap to be normal to a plane through the center of the gap. After this has been done, the gap is filled with a suitable material, such as an epoxy resin, and cured. When the construction is severed, such as along the lines 1'—1' in FIG. 5B, the result is as shown in FIG. 5C (contrast with FIG. 2). A convenient way of utilizing the technique of FIG. 5 is to provide a pair of split platens instead of the single platen 110 of FIG. 4B. The spacer segments, as shown in FIG. 5A, are stacked over the split platens during the winding sequence and secured thereto by any suitable means. At completion, the platens are shifted in the manner of FIG. 5B and this causes a shifting of all the spacer element segments. The steps of introducing the filler material and severing can then be performed as described.

The invention has been described with reference to particular embodiments, but variations within the spirit and scope of the invention will occur to those skilled in the art. For example, while it is preferred to stack spacer elements on both sides during the winding sequence so as to ultimately obtain four display panels, it will be understood that by stacking spacer elements on only one side, two display panels can be obtained from each construction. It will be further understood that the severing operations could be performed, in part, during the winding sequence. Also, it is noted that the display of FIG. 1 introduces a mirror image reversal of an input image, and suitable means can be employed to effect a cancelling pre-reversal. Finally, it will be understood that instead of winding partially or totally secured ribbons, single strands can be wound layer-by-layer.

I claim:

1. A method of making an optical display apparatus, comprising the steps of:
   (a) wrapping a plurality of optically conducting elongated strands in a substantially parallel configuration about a spacer element;
   (b) positioning at least one additional spacer element over the previously wrapped strands and rewrapping said plurality of strands over said at least one additional spacer element in spiral fashion;
   (c) repeating step (b) a desired number of times;
   (d) severing the spirally wound construction substantially along the plane of said first-mentioned spacer element; and
   (e) angularly severing a resultant portion of the construction to form a pair of wedge-shaped display apparatuses.

2. The method as defined by claim 1 further comprising the steps of shifting the relative orientations of portions of each strand overlaying a spacer element during the wrapping sequence.

3. The method as defined by claim 1 further comprising the steps of shifting the relative orientations of portions of each strand overlaying a spacer element after the wrapping sequence.

4. The method as defined by claim 1 wherein said first-mentioned spacer element includes a rotatable platen.

5. The method as defined by claim 2 wherein said first-mentioned spacer element includes a rotatable platen.

6. The method as defined by claim 3 wherein said first-mentioned spacer element includes a rotatable platen.

7. The method as defined by claim 3 wherein said shifting steps comprise providing diagonally split spacer elements and shifting the split portions of the spacer elements with respect to each other.

8. A method of forming four optical display apparatus, comprising the steps of:
   (a) wrapping a plurality of optically conducting elongated strands in a substantially parallel configuration about a relatively flat spacer element;
   (b) positioning an additional pair of relatively flat spacer elements on opposite sides of the previously wrapped strands and rewrapping said plurality of strands over said additional pair of spacer elements to form a spiral with the strands;
   (c) repeating step (b) a desired number of times;

(d) severing the spirally wound construction substantially along the plane of said first-mentioned spacer element; and

(e) angularly severing each of the resultant portions of the construction to form a pair of wedge-shaped display apparatus from each of the two portions of the construction.

9. The method as defined by claim 8 further comprising the steps of shifting the relative orientations of portions of each strand overlaying a spacer element during the wrapping sequence.

10. The method as defined by claim 8 further comprising the steps of shifting the relative orientations of portions of each strand overlaying a spacer element after the wrapping sequence.

11. The method as defined by claim 8 wherein said first-mentioned spacer element includes a rotatable platen.

12. The method as defined by claim 9 wherein said first-mentioned spacer element includes a rotatable platen.

13. The method as defined by claim 10 wherein said first-mentioned spacer element includes a rotatable platen.

14. The method as defined by claim 10 wherein said shifting steps comprise providing diagonally split spacer elements and shifting the split portions of the spacer elements with respect to each other.

* * * * *

United States Patent [19]

Glenn, Jr.

[11] **4,208,096**

[45] **Jun. 17, 1980**

[54] **OPTICAL DISPLAY APPARATUS**

[75] Inventor: **William E. Glenn, Jr.**, Fort Lauderdale, Fla.

[73] Assignee: **New York Institute of Technology**, Old Westbury, N.Y.

[21] Appl. No.: **881,671**

[22] Filed: **Feb. 27, 1978**

Related U.S. Application Data

[62] Division of Ser. No. 745,187, Nov. 26, 1976, Pat. No. 4,116,739.

[51] **Int. Cl.**[2] **G02B 5/17**

[52] **U.S. Cl.** **350/96.25**; 355/1

[58] **Field of Search** ..... 350/96.25; 353/27 R, 353/27 A, 120; 355/1, 46

[56] **References Cited**

U.S. PATENT DOCUMENTS

3,402,000	9/1968	Crawford	350/96.25
3,864,034	2/1975	Yevick	350/96.25

Primary Examiner—Stewart J. Levy

Attorney, Agent, or Firm—Martin Novack

[57] **ABSTRACT**

The disclosure pertains to an optical display apparatus, or fiber optics magnification panel, and a method of making same. The display apparatus comprises a light input surface defined by one end of each of a multiplicity of elongated optical carrier strands, e.g. fiber optic strands, the one ends being arranged in a relatively closely spaced array of rows and columns. A light output surface is substantially perpendicular to the light input surface and is defined by the other ends of the strands, the other ends being arranged in a relatively remotely spaced configuration of rows and columns. Each column of strands extends rearwardly from the input surface to a depth which depends upon the column's position in the order of columns. Each strand of a column bends sidewardly at its point of greatest depth to an orientation which is substantially parallel to the input surface. The strands of each column are of different length with each strand of a column terminating at a transverse position which depends upon its row order in the column, such that the other ends of the strands of the columns of the input surface define columns of the output surface which are at less than a right angle with respect to the columns of the input surface. The result is a compact wedge-shaped display apparatus.

5 Claims, 11 Drawing Figures

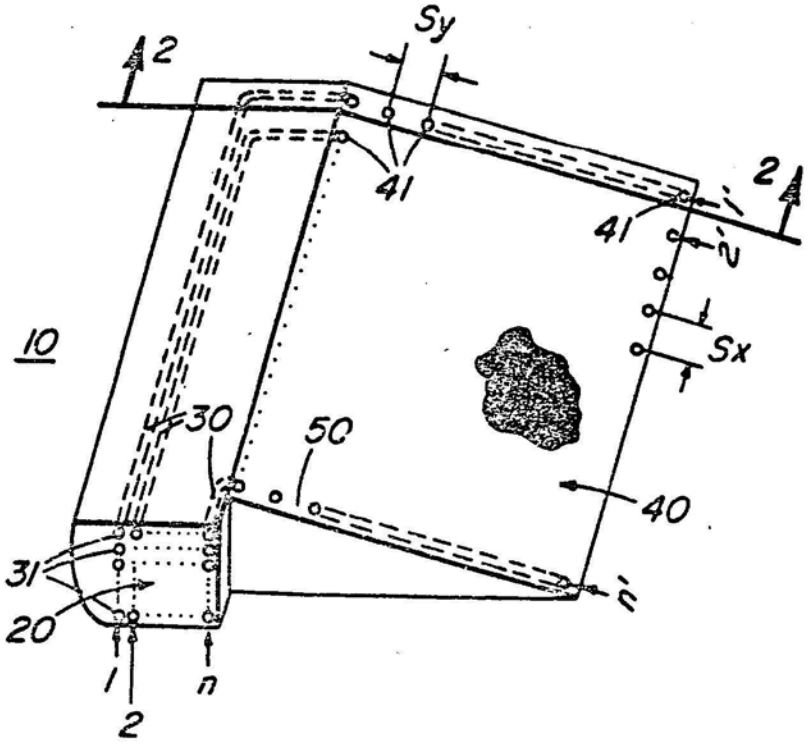

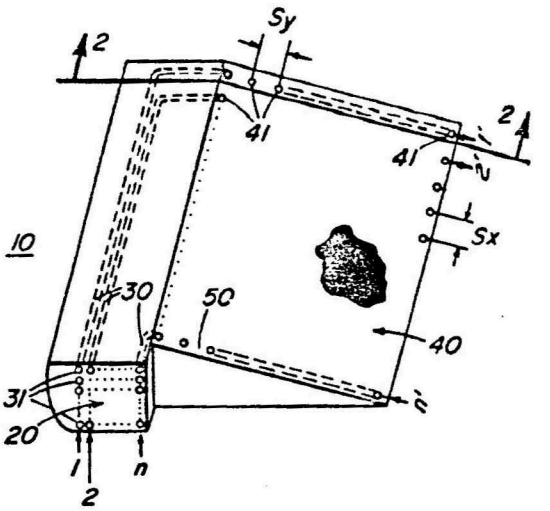

FIG. 1

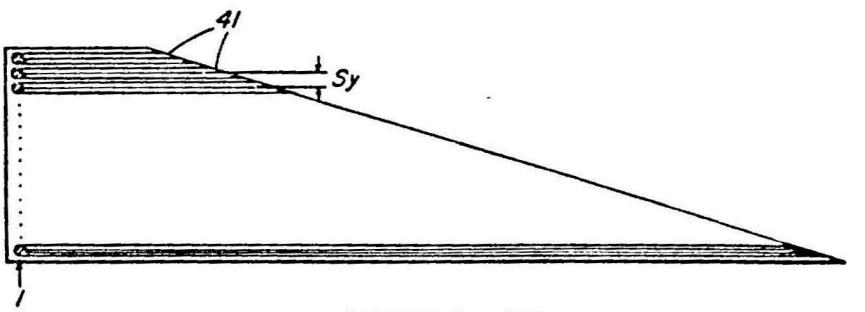

FIG. 2

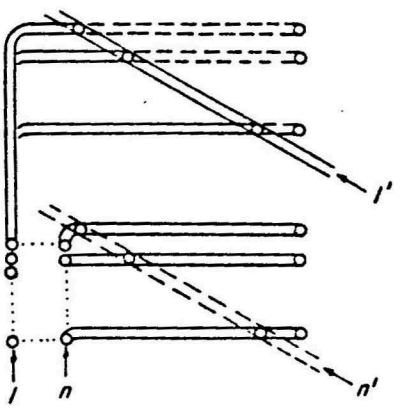

FIG. 3

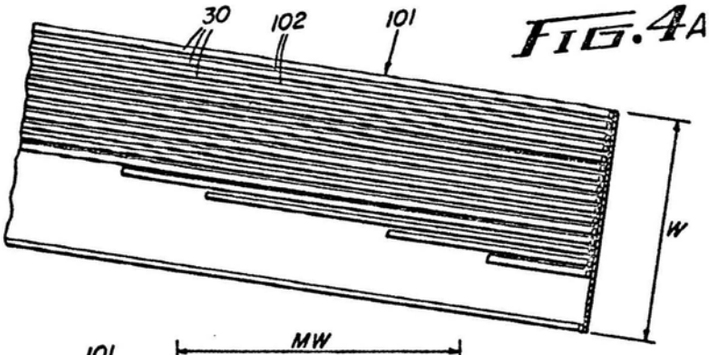

FIG. 4A

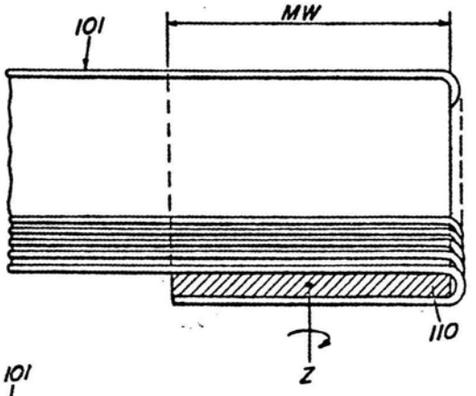

FIG. 4B

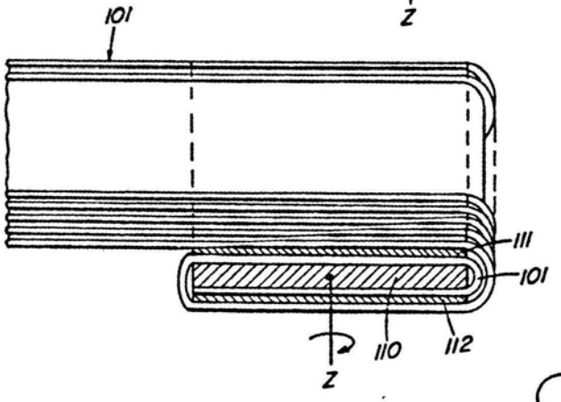

FIG. 4C

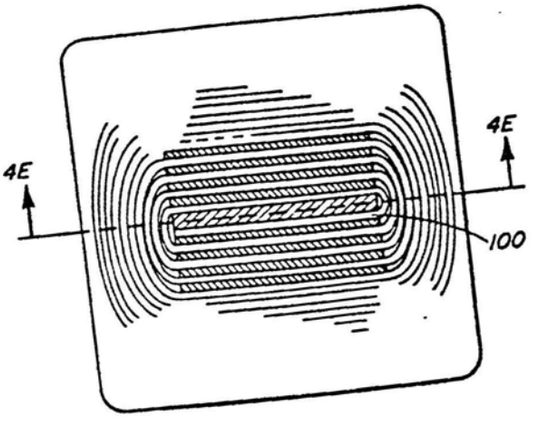

FIG. 4D

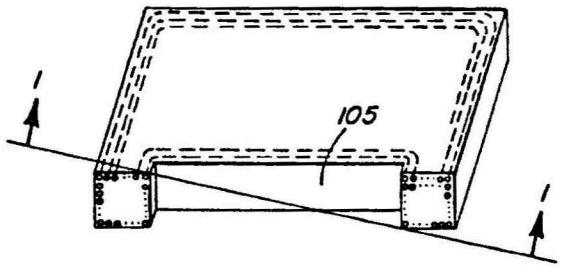

FIG. 4E

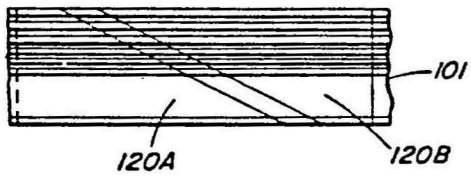

FIG. 5A

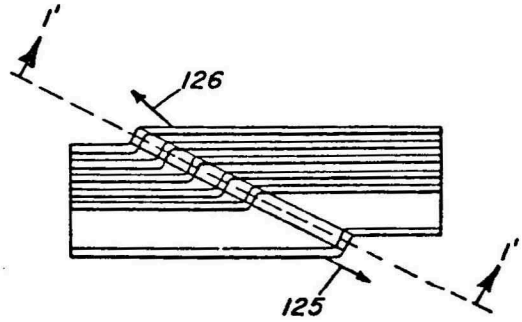

FIG. 5B

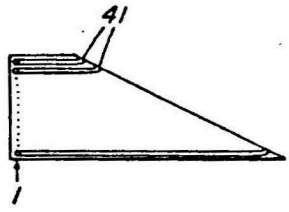

FIG. 5C

OPTICAL DISPLAY APPARATUS

This is a division of application Ser. No. 745,187, filed Nov. 26, 1976, now U.S. Pat. No. 4,116,739.

BACKGROUND OF THE INVENTION

This invention relates to the field of image magnification and display and, more particularly, to a fiber optics display panel and a method of making same.

Fiber optic image transferring, display, and magnification systems are known in a variety of forms. These systems typically employ large number of elongated filaments or strands of optically transmissive material which operate on a principle of total internal reflection. Light to be carried from one location to another enters the filament at one end and is internally reflected therein, even around fairly severe bends, with reasonably high efficiency so that most of the light is available at the exit end of the filament.

It is known that image magnification can be achieved by bunching the ends of a large number of optical fibers relatively closely together at one location to form an image input plane and separating the spacing between the other ends of the fibers at another reference plane, called the image exit plane. In this manner, the image can be "spread out" or magnified by an amount which depends on the ratio between the fiber spacings in the input plane and the fiber spacings in the output plane. Systems of this type are illustrated for example, in the U.S. Pat. Nos. 3,043,910; 3,402,000; 3,853,658; and 3,909,109. Systems of this general type can be provided with light absorbing material between the fiber ends in the output plane so as to enhance contrast. These systems are also advantageous in that they are essentially failure-free and have unlimited life. However, they tend to be relatively cumbersome since significant room is generally required to allow the optical filaments or fibers to spread out in a mechanically acceptable manner. Also, manufacturing cost of fiber optic magnification panels is a limiting factor on practicality. In particular, since large numbers of fibers are employed, it is important that the techniques of manufacture be relatively repeatable and accurate and not wasteful of material. The manufacturing process should also, ideally, not involve an unduly large number of manufacturing steps, and techniques which involve manipulation of individual fibers should ideally be avoided. However, it has been found in the past that the achievement of the most desirable geometries requires manufacturing techniques that tend to be expensive.

SUMMARY OF THE INVENTION

The present invention is directed to an optical display apparatus, or fiber optics magnification panel, and a method of making same. The display apparatus in accordance with the invention comprises a light input surface defined by one end of each of a multiplicity of elongated optical carrier strands, e.g. fiber optic strands, the one ends being arranged in a relatively closely spaced array of rows and columns. A light output surface is substantially perpendicular to the light input surface and is defined by the other ends of the strands, the other ends being arranged in a relatively remotely spaced configuration of rows and columns. Each column of strands extends rearwardly from the input surface to a depth which depends upon the column's position in the order of columns. Each strand of a column bends sidewardly at its point of greatest depth to an orientation which is substantially parallel to the input surface. The strands of each column are of different length with each strand of a column terminating at a transverse position which depends upon its row order in the column, such that the other ends of the strands of the columns of the input surface define columns of the output surface which are at less than a right angle with respect to the columns of the input surface. The result is a compact wedge-shaped display apparatus wherein the output surface array has its top row at a relative height substantially corresponding to the relative height of the top row of the input surface array and the output surface array has a bottom row at a relative height which substantially corresponds to the relative height of the bottom row of the input surface array.

In the preferred embodiment of the invented apparatus, the defined other ends of the optical carrier strands are bent so as to be substantially normal to the light output surface.

In accordance with an embodiment of the method of the invention, there are defined a number of steps by which a display apparatus of the type described can be fabricated without an unduly large number of manufacturing steps or undue manipulation of individual fibers. A plurality of substantially parallel relatively closely spaced optically conducting elongated strands, such as fiber optic strands, are wrapped about a spacer element. At least one additional spacer element is then positioned over the previously wrapped strands and the plurality of strands is rewrapped over the at least one additional spacer element in spiral fashion. The operation of positioning an additional spacer element over the previously wrapped strands and rewrapping the strands over the additional spacer element is then repeated a desired number of times. The resultant spirally wound construction is then severed substantially along the plane of the first-mentioned spacer element, and a resultant portion of this severing operation is angularly severed to form a pair of wedge-shaped display panels. In the preferred embodiment of the invention, the step of positioning at least one additional spacer element over the previously wrapped strands comprises positioning a pair of spacer elements on opposite sides of the previously wrapped strands. In this embodiment, the severing of the spirally wound construction substantially along the plane of the first-mentioned spacer element yields two substantially similar portions, and when these are angularly severed the result is four wedge-shaped display panels. The preferred embodiment of the method further comprises the steps of shifting the relative orientations of portions of each strand overlaying a spacer element during or after the wrapping sequence. This results in the ends of the strands at the light output surface of the panel being substantially normal to said light output surface.

Further features and advantages of the invention will become more readily apparent from the following detailed description when taken in conjunction with the accompanying drawings.

BRIEF DESCRIPTION OF THE DRAWINGS

FIG. 1 is an elevational perspective view of the display apparatus in accordance with an embodiment of the invention.

FIG. 2 is a cross-sectional view as taken through a section defined by the arrows 2—2 of FIG. 1.

FIG. 3 is a diagrammatical view of some of the strands of the embodiment of FIG. 1 and is useful in understanding the configuration of the strands.

FIGS. 4A through 4E illustrate a method of making a display apparatus in accordance with the embodiment of the invention.

FIGS. 5A through 5C illustrate a method of making a display apparatus in accordance with an embodiment of the invention.

DESCRIPTION OF THE PREFERRED EMBODIMENT

Referring to FIG. 1, there is shown an optical display apparatus in accordance with an embodiment of the invention. The display apparatus 10 includes a light input surface 20 defined by one end 31 of each of a multiplicity of elongated optical carrier strands 30, such as fiber optic strands, the ends 31 being arranged in a relatively closely spaced array of rows and columns. In the present embodiment, the light input surface 20 is substantially planar, although it will be understood that this surface could vary to some extent from a planar configuration, such as to conform to the shape of a device from which an image is being transferred. A light output surface 40, substantially perpendicular to the light input surface 20, is defined by the other ends 41 of the fiber optic strands 30. The ends 41 are seen to be arranged in a relatively remotely spaced array of rows and columns. The fiber optic strands of the display apparatus 10 are disposed in a supportive material 50 the nature of which will be described further hereinbelow. In the figures the dashed lines generally indicate paths of the strands and dotted lines generally indicate the presence of array elements omitted from the drawings for illustrative clarity.

To better understand the configuration of the embodiment of FIG. 1, consider the leftmost column of strands of the input surface 20, this column being referred to as column 1 of the input surface. Each strand of this column of strands extends rearwardly to a depth (the term "depth" being with respect to the input surface 20) which is approximately defined by the rearmost edge of the output surface 40 (see FIG. 3). The other ends of the strands of column 1 define a column designated 1' in the array of the output surface 40. FIG. 2 is a cross section showing the strands of column 1 at about their point of rearmost extension, and it can be seen that each strand bends sidewardly at its point of greatest depth to an orientation which is substantially parallel to the input surface 20, the other ends of these strands constituting the column 1' of the output surface array. (The columns of the output surface are designated as "columns" due to their relationship with the columns of the input surface. To view them as columns in FIG. 1, the FIG. can be turned sideways such that column 1' is on the right.)

The next column of strands of the input surface, designated as column 2, extends rearwardly to a depth slightly less than the depth to which the column 1 strands extend, and, as before, each of these strands bends sidewardly at its point of greatest depth to an orientation which is substantially parallel to the input surface. Thus it is seen that each column of strands extends rearwardly from the input surface 20 to a depth which depends upon the column's position in the order of columns; viz, column 1 extending rearwardly by the greatest amount, column 2 extending rearwardly by the next greatest amount, . . . and the last column, designated column n, extending rearwardly the smallest amount.

It is seen from the above that each strand of a column bends sidewardly at its point of greatest depth to an orientation which is substantially parallel to the input surface. The strands of each column are of different length, with each strand of a column terminating at a transverse position which depends upon its row order in the column, such that the other ends (41) of the strands of the columns define columns of the output surface which are at less than a right angle with respect to the columns of the input surface, yielding a wedge-shaped panel. This is illustrated, for example, in FIG. 2 wherein it is seen that the top strand of column 1 terminates at a lesser transverse (or sideward) position than the second-from-the-top strand of column 1 which, in turn, terminates at a lesser transverse position than the third-from-the-top strand of column 1, etc. Accordingly, with each strand of a column terminating at a transverse position which depends upon its row order in the column, the elevation of the light output surface varies uniformly to yield a compact wedge-shaped display panel.

FIGS. 4A–4E illustrate the steps of an embodiment of a method in accordance with the invention for making a display panel of the type described in conjunction with FIG. 1. In accordance with the invented method, a plurality of relatively closely spaced optically conducting elongated strands, such as fiber optic strands in parallel configuration, are utilized. Since substantial lengths of these strands are employed, it is convenient to prepare a "ribbon" 101, such as is shown in FIG. 4A, which comprises a multiplicity of strands 30 in uniformly spaced parallel relationship supported on a carrier 102. The ribbon may be made available on a spool or in any other form from which substantial lengths thereof can be readily removed.

The ribbon 101 of fiber optic strands is wrapped about a relatively flat spacer element 110, as shown in FIG. 4B. In the embodiment of FIG. 4, this and subsequent wrapping operations are achieved by rotating the spacer element 110, which serves as a rotating platen, about an axis Z. It will be understood, however, that the wrapping operations could alternately be performed by moving the source of ribbon, such as a ribbon spool, in spiral fashion, around the spacer element. After the ribbon has been wrapped once around the spacer element 110, a suitable encasing or binder material, such as a plastic or resin, may be disposed on and between the strands 30. Additional relatively flat spacer elements are then positioned over the previously wrapped strands, the spacer element 111 being positioned over one exposed surface of the ribbon 101, and a spacer element 112 being positioned over the other exposed surface of the ribbon 101. The strands are then rewrapped over the additional spacer elements, such as by effecting an additional revolution of the platen 110 (FIG. 4C). The steps of adding additional spacer elements and subsequent spiral wrapping are then repeated a desired number of times to obtain a construction as is shown in side view in FIG. 4D. The construction is next severed along the plane of the first spacer element 110, as indicated by the arrows 4E—4E in FIG. 4D. Two identical portions, one of which is shown in FIG. 4E, are obtained. In the present embodiment, the platen 110 is reusable and would typically be removed before or during the severing of the construction of FIG. 4D so as to leave the groove designated 105 in FIG. 4E. In such case, before the additional wrapping of FIG. 4B, a pair

of spacers may be positioned on opposite sides of the platen 110 and bound to the first wrapped strands, and these spacers will comprise the material on the wall of the groove 105 of each of the two portions of the severed construction. Each portion resulting from the severing of the construction of FIG. 4D, as shown in FIG. 4E, is then angularly severed along the section indicated by arrows 1—1 of FIG. 4E. This severing operation, which can be further visualized from the broken lines of FIG. 3, results in a pair of wedge-shaped display panels as originally shown in FIG. 1.

The distances between the strand ends of the light output surface array are designated S_x and S_y, as labeled in FIG. 1. The spacing S_x is determined by the thickness of the spacer elements plus the fiber thickness. The spacing S_y can be seen to be determined from

$$S_Y=(M\cdot W/N)$$

where W is the width of the ribbon of strands, M is the magnification factor, M·W is the length of the spacer element, and N is the number of strands in the ribbon. The magnification factor M, i.e. the ratio between the spacer element length and the ribbon width, is selected to achieve a desired degree of magnification. In one embodiment of the invention, a black paper having a thickness of M times the thickness of the ribbon is employed as the spacer elements, so as to achieve a magnification M in the S_x direction. The use of a black material between the strands in the ribbon, as well as for the spacer material, facilitates the viewing of a magnified image in a relatively high ambient environment, since the strand output ends are surrounded by a larger light-absorbing, non-reflecting area which keeps ambient illumination from reaching the viewer of a displayed image. As noted, during manufacture, a suitable binder may be employed between the wrapped layers and then set or cured by heating prior to severing the construction. After the severing operations, each resultant display panel can be finished by suitable polishing, varnishing, or the like.

As seen in FIG. 2, the ends of the fiber optic strands at the output surface are not normal to the output surface itself. If the strands have very small diameters, the light emanating from them will be distributed relatively isotropically. However, if relatively large strands are utilized, it may be desired to orient the ends of the strands so that they are substantially perpendicular to the output surface. One way of achieving this is to utilize spacer elements that have a diagonally oriented gap, as shown in FIG. 5A, the gap corresponding to the position of the severing plane 1—1 of FIG. 4E. Once the ribbon 101 has been wrapped over the spacer element, the two segments of the spacer element, labeled 120A and 120B, are shifted slightly along the diagonally oriented reference, as represented by the arrows 125 and 126 in FIG. 5B. The magnitude of the shift is sufficient to orient the strands in the gap to be normal to a plane through the center of the gap. After this has been done, the gap is filled with a suitable material, such as an epoxy resin, and cured. When the construction is severed, such as along the lines 1'—1' in FIG. 5B, the result is as shown in FIG. 5C (contrast with FIG. 2). A convenient way of utilizing the technique of FIG. 5 is to provide a pair of split platens instead of the single platen 110 of FIG. 4B. The spacer segments, as shown in FIG. 5A, are stacked over the split platens during the winding sequence and secured thereto by any suitable means. At completion, the platens are shifted in the manner of FIG. 5B and this causes a shifting of all the spacer element segments. The steps of introducing the filler material and severing can then be performed as described.

The invention has been described with reference to particular embodiments, but variations within the spirit and scope of the invention will occur to those skilled in the art. For example, while it is preferred to stack spacer elements on both sides during the winding sequence so as to ultimately obtain four display panels, it will be understood that by stacking spacer elements on only one side, two display panels can be obtained from each construction. It will be further understood that the severing operations could be performed, in part, during the winding sequence. Also, it is noted that the display of FIG. 1 introduces a mirror image reversal of an input image, and suitable means can be employed to effect a cancelling pre-reversal. Finally, it will be understood that instead of winding partially or totally secured ribbons, single strands can be wound layer-by-layer.

I claim:

1. An optical display apparatus, comprising:
- a light input surface defined by one end of each of a multiplicity of elongated optical carrier strands, said one ends being arranged in a relatively closely spaced array of rows and columns; and
- a light output surface substantially perpendicular to said light input surface, said light output surface being defined by the other ends of said strands, said other ends being arranged in a relatively remotely spaced configuration of rows and columns;
- each column of strands extending rearwardly from said input surface to a depth which depends upon the column's position in the order of columns;
- each strand of a column bending sidewardly at its point of greatest depth to an orientation which is substantially parallel to said input surface;
- the strands of each column being of different length with each strand of a column terminating at a transverse position which depends upon its row order in the column, such that said other ends of the strands of the columns of the input surface define columns of the output surface which are at less than a right angle with respect to the columns of the input surface.

2. The apparatus as defined by claim 1 wherein the array of said output surface has its top row at a relative height substantially corresponding to the top row of said input surface array and said output surface array has a bottom row at a relative height which substantially corresponds to the relative height of the bottom row of said input surface array, such that said display apparatus is wedge-shaped.

3. The apparatus as defined by claim 1 wherein said other ends are bent so as to be substantially normal to said light output surface.

4. The apparatus as defined by claim 2 wherein said other ends are bent so as to be substantially normal to said light output surface.

5. The apparatus as defined by claim 1 wherein said other ends are disposed in a relatively low-reflection material.

* * * * *

DRAFT

RESEARCH AGREEMENT

* * * * * * *

FIBER OPTICS DISPLAY LIMITED PARTNERSHIP

and

NEW YORK INSTITUTE OF TECHNOLOGY

TABLE OF CONTENTS

Section		Page
Preamble		1
1.	Existing Technology and Existing Rights	3
2.	Research and Development To Be Performed	4
3.	Payment By Partnership To NYIT For Research	5
4.	Ownership of Subject Technology	6
5.	Patent Prosecution, Maintenance, and Enforcement	7
6.	Exploitation of Subject Technology	9
7.	Revenues From Exploitation of Covered Technology	10
8.	Payments To NYIT From Net Revenues	11
9.	Records, Reports, and Payments	12
10.	Confidentiality	13
11.	Term	14
12.	Assignability	14
13.	Governing Law	14
14.	Severability	14
15.	Arbitration	15
16.	Section Headings	16
17.	Entire Agreement	16

RESEARCH AGREEMENT

THIS AGREEMENT is made as of the _____ day of _____, 1981, by and between FIBER OPTICS DISPLAY LIMITED PARTNERSHIP ("Partnership"), a _____ Limited Partnership, and NEW YORK INSTITUTE OF TECHNOLOGY ("NYIT"), a corporation organized and existing under the Education Law of the State of New York.

WHEREAS, the Partnership has been organized primarily for the purpose of investment in research on and development of technology relating to fiber optics display panels and the exploitation of the technology resulting from the research; and

WHEREAS, NYIT owns certain technology, including information, know-how, patents, and a feasibility model pertaining to fiber optics display panels; and NYIT has a research center and staff capable of performing research on and development of improvements of its technology pertaining to fiber optics display panels; and

WHEREAS, the Partnership is desirous of utilizing the capabilities and services of NYIT in performing research on and development of improvements of technology pertaining to fiber optics display panels, protection of said technology

by patents or other means, licensing of said technology to industry, and administration of said licenses; and

WHEREAS, NYIT, as a condition of performing services hereunder, requires assured complete funding of the research and development so that the necessary commitment of staff and facilities can be made and so that the research and development will have a reasonable probability of resulting in commercially exploitable technology.

NOW, THEREFORE, in consideration of the mutual covenants and agreements herein contained and of other good and valuable consideration, the sufficiency of which is hereby acknowledged, the parties hereto covenant and agree as follows:

the parties hereto covenant and agree as follows:

1. Existing Technology and Existing Rights

NYIT represents and warrants that it is the owner of a feasibility model of a display panel of the type set forth in U.S. Patent No.s 4,116,739 and 4,208,096 ("Fiber Optics Display Panel"), and of information, drawings, data, and know-how pertaining to the Fiber Optics Display Panel (all collectively referred to as the "Existing Technology"), and that it is the ownerof the patents, patent applications, and invention disclosures listed in Appendix A (all collectively referred to as the "Existing Rights").

2. Research And Development To Be Performed

The NYIT Science and Technology Research Center ("NYIT/STRC"), a division of NYIT, shall perform research and development to improve the Existing Technology. In particular, NYIT/STRC shall exert its best efforts to:

1) construct pre-production prototypes having specifications as set forth in Appendix B; and

2) develop and demonstrate a method of automatic or semi-automatic volume fabrication of the Fiber Optics Display Panel, including definition of the main features of equipment for such fabrication.

NYIT represents and warrants that it shall perform and complete the research and development hereof within one year from the date of this Agreement. NYIT shall expend the entire contract amount specified in Section 3 within said one year from the date of this Agreement. In computing the amount expended, NYIT shall include: (1) its labor and materials costs (plus the prevailing overhead rates it charges its commercial customers for each of labor and materials for contract research and development work); and (2) any payments by NYIT for subcontract work subcontracted for by NYIT for tasks necessary in the performance of the research and development work hereof (plus overhead at the rate of ____% of the said payments by NYIT.) In no event shall the total of payments by NYIT for any subcontract work, plus the overhead thereon, exceed _____% of the entire contract amount hereof.

3. Payment By Partnership To NYIT For Research

In order to assure complete funding of the research and development hereof, and to enable NYIT to make the commitment of staff and facilities necessary to perform the research and development hereof within the term hereof, the Partnership shall pay NYIT the full and nonrefundable contract amount of

*	15 Units	20 Units
	$1,750,000	$2,450,000

within _____ days of the date of this Agreement.

*This schedule shows the contract amount which would apply to the sale of 15 Units or 20 Units of Limited Partnership interest. The executed Agreement will reflect the actual number of Units sold by the closing of the accompanying offering of Limited Partnership Units.

4. Ownership of Subject Technology

Subject Technology is defined as any and all inventions (including patents thereon), improvements, discoveries, information, data, and know-how conceived or developed in the course of the research and development hereof, but excluding the Existing Technology. The Partnership shall own the Subject Technology.

5. Patent Prosecution, Maintenance, and Enforcement

NYIT shall apply for and maintain patent protection on inventions conceived during the course of the research and development work hereof, the filing and maintenance decisions to be made by NYIT based on good faith considerations of potential patentability and potential commercial exploitation. All costs of filing, prosecuting, and maintaining patent applications and patents shall be borne by NYIT.

NYIT shall have the right, but not the obligation to bring suit, at its own expense, to protect the Subject Technology, for example suit for infringement of patents in the Subject Technology or suit for wrongful appropriation of unpatentable portions of the Subject Technology. If NYIT elects not to sue, the Partnership shall have the right, but not the obligation,to bring such suit, at its own expense. Each party agrees to be joined as a party, if legally necessary, in such a suit brought by the other party, the joined party to pay its own expenses, including its own attorneys' fees if it retains counsel. Any recovery from said suit shall be divided equally until the party having less expenses (including reasonable attorneys' fees) has recouped its expenses of said suit. Thereafter, the other party shall receive all subsequent recovery until it has recouped its expenses of said suit. Thereafter, all subsequent recovery

of unpatentable portions of the Subject Technology. If

shall be received by the Partnership as if it were Net Revenues under Section 7 hereof, subject to payments to NYIT under Section 8 hereof.

6. Exploitation of Subject Technology

The Partnership grants to NYIT the exclusive right to engage in the licensing or other exploitation of the Subject Technology on behalf of the Partnership. NYIT shall exert its best efforts, at its own expense, to license to third parties or otherwise exploit the Subject Technology. All licenses or other agreements exploiting the Subject Technology shall be made in the name of the Partnership, except that if said license or other agreement also pertains to the Existing Technology, it shall be made jointly in the names of the Partnership and NYIT. NYIT shall obtain approval from the Partnership before entering into any license or other agreement on behalf of the Partnership. NYIT shall have the right to request prior approval from the Partnership of a proposed agreement, or proposed terms and conditions relating to a license or other means of exploiting the Subject Technology, and the Partnership agrees to promptly respond to said request.

7. Revenues From Exploitation of Covered Technology

Covered Technology is defined as all inventions, improvements, discoveries, products, processes information, data, and know-how that is conceived, made, reduced to practice, results from, or is in any way improved (patentably or otherwise and irrespective of the degree of improvement) by or in the course of or is the subject of the research and development hereof. Net Revenues are defined as all royalties or other consideration (but excluding any future reasonable payments to NYIT for further contract research on or development of the Covered Technology) resulting from exploitation of the Covered Technology. All Net Revenues shall belong to the Partnership, subject to the payments to NYIT as set forth in Section 8.

8. Payments To NYIT From Net Revenues

The Partnership shall make the following payments to NYIT from Net Revenues received by the Partnership under Section 7:

(a) 50% of said Net Revenues until the Partnership has retained for itself from net revenues a threshold amount equal to two times the sum of all capital contributions and all interest on capital contributions contributed or paid to the Partnership by the Limited Partners of the Partnership; and

(b) after said threshold amount has been retained by the Partnership, 75% of said Net Revenues.

9. Records, Reports, And Payments

NYIT shall keep clear and complete records of the Subject Technology and shall report to the Partnership at six month intervals on the progress of the research and development. At the completion of the research and development hereof, NYIT shall report to the Partnership regarding details of its expenditures of the contract amount. The Partnership shall keep clear and complete records of all net revenues it receives under Section 7. In the event that any Net Revenues are received by NYIT under Section 7 they shall be received on behalf of the Partnership and shall be promptly deposited in a separate bank account maintained by NYIT for the benefit of the Partnership and from which the Partnership may make withdrawals. All records of either party pertaining to this Agreement shall be available to the other party and its representatives during normal business hours.

Within 30 days after the end of each calendar quarter, the Partnership shall provide NYIT with a report of Net Revenues it has received during said calendar quarter and of payment due NYIT under Section 8. Any payments due NYIT shall then be made no later than 45 days after the end of said calendar quarter.

10. Confidentiality

So long as this Agreement shall remain in force, each party hereto shall take all steps which are necessary or reasonable to safeguard the confidentiality of information which it receives from the other party and which is identified in writing as being confidential. However, neither party shall be responsible for maintaining confidentiality of information which:

(a) is or becomes part of the public domain without fault of said party; or

(b) was already known to said party, as shown by its written records.

11. Term

This Agreement and the rights granted hereunder shall be effective as of the date of execution hereof and shall continue in full force and effect until the last to occur of the following:

(a) the expiration of the last to expire of any patent on an invention in the Subject Technology, including any reissues or renewals of said patent;

(b) twenty years from the date of execution hereof.

12. Assignability

This Agreement may not be assigned by either party without the prior written consent of the other party; provided, however, that either party may assign this Agreement to a successor in interest of substantially its entire business or assets. The assignor shall remain responsible for performance and observance of all duties and obligations of the assignee of this Agreement.

13. Governing Law

This Agreement has been entered into and shall be construed and enforced in accordance with the laws of the state of _____.

14. Severability

In case any one or more of the provisions contained in this Agreement should be invalid, illegal or unenforceable

[illegible], however, that either party may assign this

in any respect in any jurisdiction, the validity, legality and enforceability of such provision or provisions shall not in any way be affected or impaired thereby in any other jurisdiction and the validity, legality and enforceability of the foregoing provisions contained herein and therein shall not in any way be otherwise affected or impaired thereby.

15. Arbitration

Any controversy or claim arising out of or relating to this Agreement, or the breach thereof, shall be settled by arbitration in accordance with the Rules of the American Arbitration Association, and judgment upon the award rendered by the Arbitrator(s) may be entered in any Court having jurisdiction thereof.

16. Section Headings

The underlined section headings are included herein for convenience, and do not constitute a part of this Agreement.

17. Entire Agreement

This instrument sets forth the entire agreement of the parties with respect to the subject matter hereof, and may be modified only by a writing signed by the parties hereto.

IN WITNESS WHEREOF, the parties have executed this Agreement on the day and year first above written.

NEW YORK INSTITUTE OF TECHNOLOGY

By_____

ATTEST: President

_____

FIBER OPTICS DISPLAY
LIMITED PARTNERSHIP

By_____

General Partner

ATTEST:

_____

APPENDIX B

The New York Institute of Technology Science and Technology Research Center shall exert its best efforts to construct pre-production fiber optics screen with the following specifications. It is to be noted that, although several of these devices will be fabricated, some of them will be used exclusively for extensive testing which will include optical properties, dynamic performance and reliability, and ruggedness-type tests. As a result of the latter tests, damage may result to the screen; however, the data on these tests will be available to the partnership and/or licensees.

Specifications

Screen

Specifications	A	B	C	D
1) Diagonal of Displayed Picture (Approx. Inches)	7"	7"	15"	15"
2) Diagonal of Input Image (Approx. Inches)	1¼"	1"	1¼"	1"
3) Picture Dimensions (Approx. Inches)	4.2"x5.6"	4.2"x5.6"	9"x12"	9"x12"
4) Magnification (Approx.)	5.6	7	12	15
5) Number of Picture Elements	240 x 320	480 x 640	240 x 320	480 x 640
6) Screen Thickness	2"	2"	2"	2"
7) Reflectivity of Display Surface	3%	3%	3%	3%

PROPOSED RESEARCH GRANT

FOR

FIBER OPTIC RIBBON TECHNOLOGIES

Prepared for:

Research Corporation
405 Lexington Avenue
New York NY 10174

Prepared by:

Science and Technology
Research Center
of the
New York Institute of
Technology
8000 North Ocean Drive
Dania FL 33004

Dated: March 15, 1983

W. E. Glenn, Director

ABSTRACT

This research is directed at establishing processes and methodologies for providing plastic fiber optic ribbon cable. Specifically, the objective is to establish techniques and compatible material for making accurately spaced, very fine, continuous lengths of multiple fiber optics. To do so requires evaluation of fabrication methods in concert with the measurement of many parameters of various plastics. These parameters are generally either never measured or are a function of the effects of the processes (which modify the parameters) and are not fully understood or documented.

Background

The Science and Technology Research Center of the New York Institute of Technology has been performing basic research and development on electronic display devices for several years. These efforts have been vectored toward means of replacing Cathode Ray Tubes (CRT) which have been used exclusively in television receivers and computer terminals. The CRT's have known limitations which include: limited brightness, large size (cumbersome and heavy), limited life, inefficiency and poor contrast in high ambient light conditions.

NYIT has fully supported research which to date has provided two new technology bases. The first is the development of a fiber optic optical magnifying device. This panel is flat, black by reflected light, lightweight, rugged, and has very long life. Therefore an image may be projected and displayed with high brightness, high contrast and viewed under high ambient light conditions. Under the guidance of Dr. Glenn, the Center director and inventor of the panel concept, two feasibility models have been fabricated. These units demonstrate the potential of the technology as well as the need to have accurately spaced fiber optic ribbon. The higher the accuracy of the relative placement of the fiber optics to each other, the better the coherence of the projected image. To insure the advancement of the technology requires additional research into the processes and methodologies for producing continuous fiber optic ribbon.

Research Objectives

The purpose of this research is to study methodologies and processes for forming accurate fiber optic ribbon. The primary need for this ribbon is for fabricating image magnifiers which are flat and could ultimately be used to replace Cathode Ray Tube displays and other projection screens. Other potential applications for the ribbon technology include optical communication and medical in vitro probes.

Significant advances have been made in recent years in the development of single fiber optics either using plastic or glass. The normal process is to draw the fiber from blocks of materials. Fibers less than 0.001 inch have thus been obtained. However, there is no practical process which will produce ribbon containing hundreds of fibers wherein the fibers are accurately spaced linearly with respect to each other. Small samples with finite lengths may be made (and have been made at NYIT) by essentially gluing individual fibers together equally spaced around a drum.

To advance the state of fiber optics as image magnifiers requires continuous lengths of ribbon containing hundreds of fibers accurately spaced with respect to each other. Various fiber sizes should be available with fibers down to 0.001 inch included with spacing between fibers held to a high accuracy.

The primary purpose of this proposed research is to evaluate plastic fabrication processes in concert with the evaluation of plastics to allow the automated production of accurate fiber optic ribbon. Producers of plastics rarely provide sufficient data for determining the necessary parameters for processes, particularly when dealing in the optical domain.

The ribbon requires two plastics with different indices of refraction. However, in several cases the index of refraction changes after the plastic is processed (i.e., extruded or made into film). Furthermore, a given process requires certain compatibilities of the plastics; i.e., for co-extrusion through a common die, the melting points and viscosities of the plastics must be within given limits.

Research Costs and Schedule

Dr. William Glenn, the Center director and inventor of the fiber optics panel, will direct the research on this program. He will be supported by the necessary staff personnel in accordance with their expertise as needed on the program. It is assumed that the majority of the activities proposed herein can be accomplished in a period of three to four months. The costs proposed herein are to provide only salaries and overhead. Material cost, equipment and supplies will be provided by NYIT.

Budget -

Salaries and Wages	$ 7,380.
Overhead and Indirect Costs	7,380.
Total Cost	$14,760.

Draft of Description
For The Layman

Background

The NYIT fiber optics display panel uses thousands of hair-like fiber optics strands to carry the light from a tiny image to the display screen viewing surface where the image is magnified to many times its original size. The fiber optics strands used in the invented display panel are the same fiber optics upon which a whole new growth industry, called fiber optics communications, has been based. Light travels very efficiently through the fiber optic strands, even when the strands are curved or bent, and the light is used as a carrier of large quantities of information. By employing a cable consisting of hundreds of fiber optical strands, tremendous amounts of information can be efficeintly communicated over large distances at low power. Electrical signals are used to "modulate" (or encode) light, and the light travels through the fiber optical strands and carries the encoded information of the electrical signals along with it. The information can then be recovered by "demodulating" (or decoding) received light. A number of large and small companies are involved in the various aspects of fiber optics communications industry, including: manufacturing the fiber optical strands out of plastic or glass; fabricating the cable out of bundles of fiber optical strands; and manufacture of

electronic and light generating devices that interface with the cables of strands.

In the NYIT fiber optics display panel, the individual fiber optical strands are used for a different purpose than their counterparts in fiber optics communications; namely, to carry the light representative of an actual image, such as a television picture or alphanumerics. There is no encoding or decoding. Each strand carries a tiny elemental piece of the picture. As in the conventional communications application of fiber optics, the NYIT fiber optics display panel makes good use of the ability of the fiber optical strands to carry light with very high efficiency, even when the strands are bent around a corner.

The concept of using fiber optics to transfer an image from one place to another, while magnifying the image, is not new. Medical probes and specialized displays which use fiber optics have been in use for many years. In addition to transferring an image from one place to another, prior systems have included the concept of magnification that results from having a closely-packed bundle of fibers, into which the small image is input, that spread out to a more loosely packed bundle. The light emanating from the loosely packed end presents a magnified version of the image. The principle is illustrated in Figure 1. Existing fiber optics image transferors and magnifiers are expensive, and use is generally found in specialized applications, such as medical instruments, where cost is not the limiting factor.

The recognized problem, and the main expense factor, in fabricating a fiber optical image magnifier has been the need to precisely handle the many thousands of hair-like fiber optical strands that are necessary for magnifying a detailed image. The fiber strands have to be gradually "spread out" with a supporting material being disposed between the strands. This problem has heretofore prevented most investigators from even considering that a good quality fiber optics display would be buildable at reasonable cost. Also, the type of display magnifiers generally proposed need a substantial volume of space in which the fibers can "spread out". The result can be a cumbersome display that may offer little advantage in configuration or weight.

The NYIT fiber optics display panel is intended to fill the need for a quality image magnifier that has a generally flat lightweight configuration, and can be inexpensively manufactured in quantity.

Description of the Panel

Figure 2 illustrates operation of the NYIT fiber optics display panel. A small "input" image (1) at the input surface (2) of the display panel is magnified and presented at the output surface (3) of the panel. The relative sizes of the input and output surfaces is a matter of design choice. In the Figure 2 example, the output surface is ten times larger in both length and width than the input surface. This results in the output surface area being 100 times larger than the input surface area. The magnification illustrated in Figure 2 is approximately the same as the magnification that was achieved in the first prototype model built and demonstrated by NYIT; that is, an input surface of 1" by 1" (one square inch), and an output surface of 10" by 10" (100 square inches). The thickness of the panel is wedge-like, with the dimension at its thickest point being about the same as the width of the input surface (i.e., about 1" in the first model). The spaces between the individual fibers of the output surface contain a black plastic material that does not tend to reflect room light and is a factor in the panel's excellent performance in a bright room. In Figure 2 the space between fibers at the output surface is shown as being exagerratedly large for purposes of illustration. When produced to commercial

specifications, the space between fibers in the output surface will be relatively small, so that the displayed image does not include gaps at normal viewing distance. (In this regard, it can be noted that in a standard color television tube a close examination of the screen reveals that the image is made up of dot clusters separated by passive background regions. In the so-called "black matrix" color television tubes, the passive background regions are rendered black to obtain better contrast.)

In the unique configuration of the NYIT fiber optics display panel, each column of optical fibers of the input surface extends rearwardly to a given position and then bends sideways. This is shown in Figure 3. The spacing of the fibers in one direction of the output surface is achieved by an angular cut "on the bias" which results in the panel being wedge-shaped. The spacing of the fibers in the other direction of the output surface is achieved with plastic spacers, as will become clearer during description of the manufacturing technique.

Manufacturing Procedure

A relatively inexpensive manufacturing procedure is essential for any display panel that hopes to achieve widespread market acceptance as a home, office, or portable display terminal. The NYIT fiber optics display qualifies in this regard by allowing fabrication in quantity without the need for positioning or manipulating individual fibers. A "ribbon" of side-by-side fiber optical strands is employed. The ribbon is wound around thin plastic spacers, the material of the spacers being the black material in Figure 2 that ends up separating individual rows of the panel's output surface. The ribbon is shown in Figure 4 and is seen to include a multiplicity of fiber optical strands. The strands are clad with a black plastic material that is also used to bind them together.

The thin black plastic spacers are shown in Figure 5. The spacers have a length that equals the length of the desired display panel output surface, and a width that equals the thickness of the display panel at its thickest point. The manufacturing technique, which is described in detail in the patents covering the display panel and its fabrication, involves successive steps of winding the ribbon and stacking spacers to obtain a many-layered "sandwich". The sandwich is subsequently severed twice to obtain four fiber optics display panels. Figure 6 illustrates the procedure.

Generating The Image

The N Y I T fiber optics display panel is a highly efficient image magnifier. When the image to be magnified is already available (such as a slide or move film), a bulb or other light source is all that is needed to generate the image at the input surface of the fiber optics display panel. If the input is in the form of an electronic video (television) signal, it is necessary to generate a small bright image to be magnified by the display panel. An immediate expedient is to use a very small television tube, whose face is applied to the input surface of the display panel for magnification. The combination of these two devices retains most of the space-saving and lightweight advantages of the panel.

Recent technological developments in generation of small bright images are expected to soon give rise to various alternative image generators. A number of companies have developed compact image generators, and are working toward commercial versions. Also, Dr. Glenn invented and demonstrated a compact solid state image generator on a semiconductor chip called a "CCD light valve" (U. S. Patent No. 3,882,271) which could efficiently provide the desired image if development is funded.

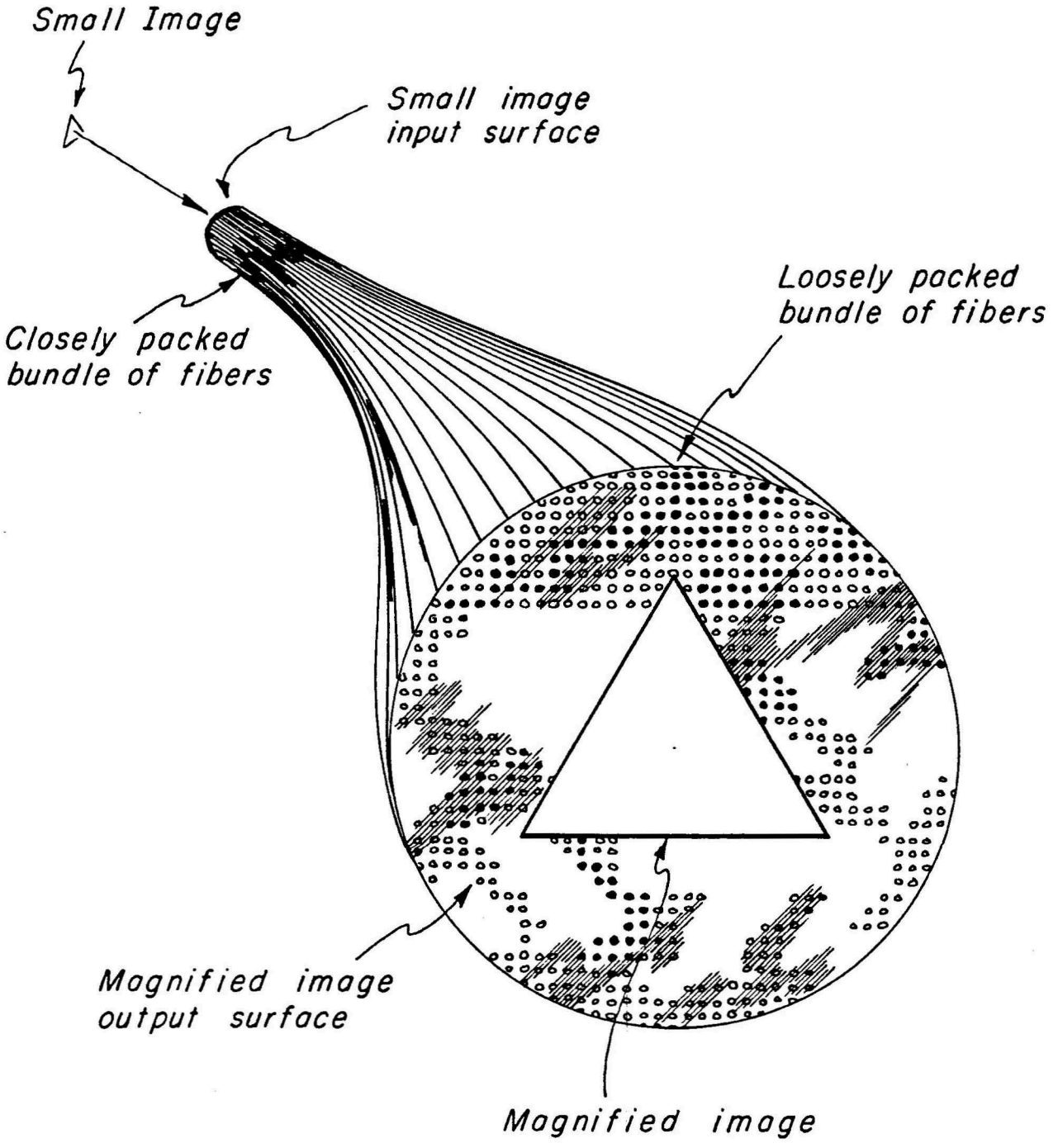
Small Image
Small image input surface
Loosely packed bundle of fibers
Closely packed bundle of fibers
Magnified image output surface
Magnified image

Fig. 1

Fig. 2

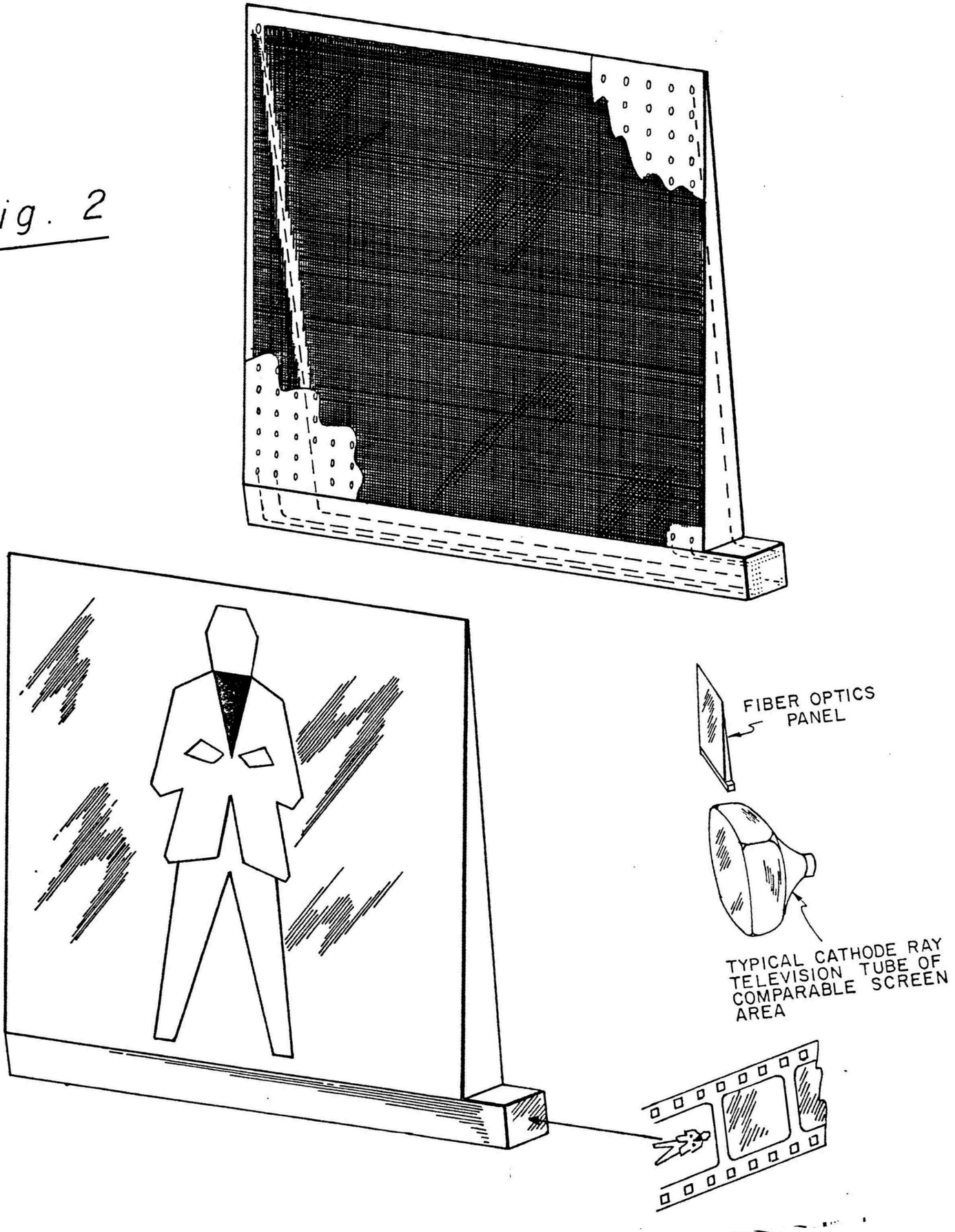
FIBER OPTICS PANEL
TYPICAL CATHODE RAY TELEVISION TUBE OF COMPARABLE SCREEN AREA

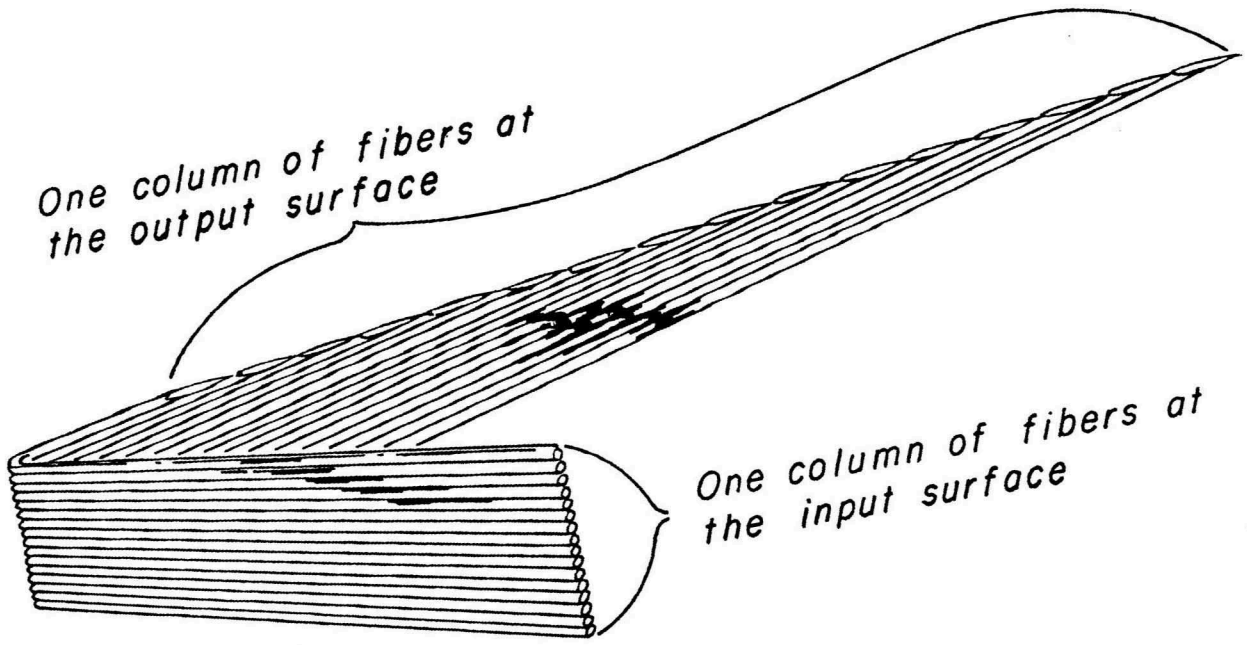

Fig. 3

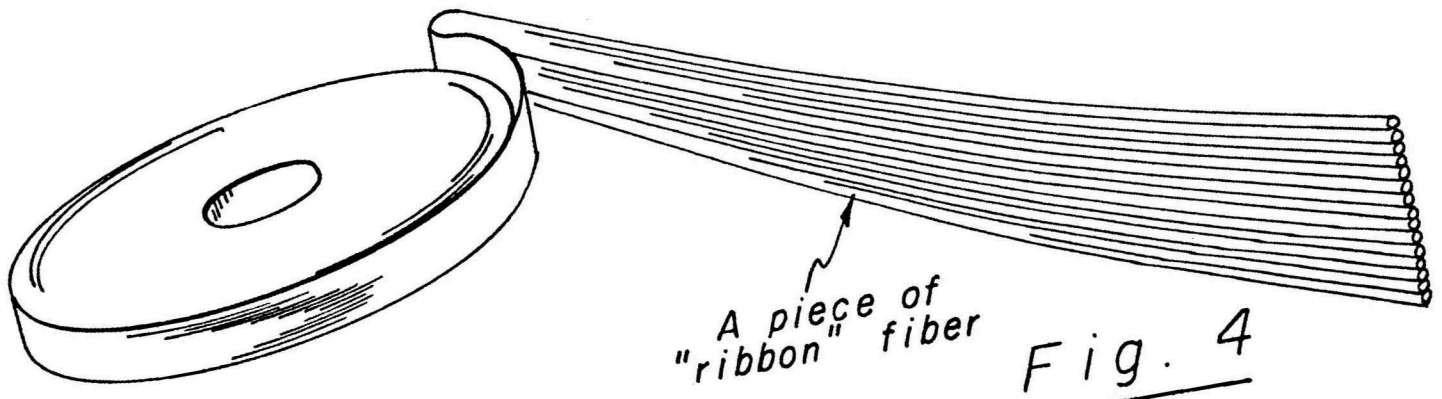

Fig. 4

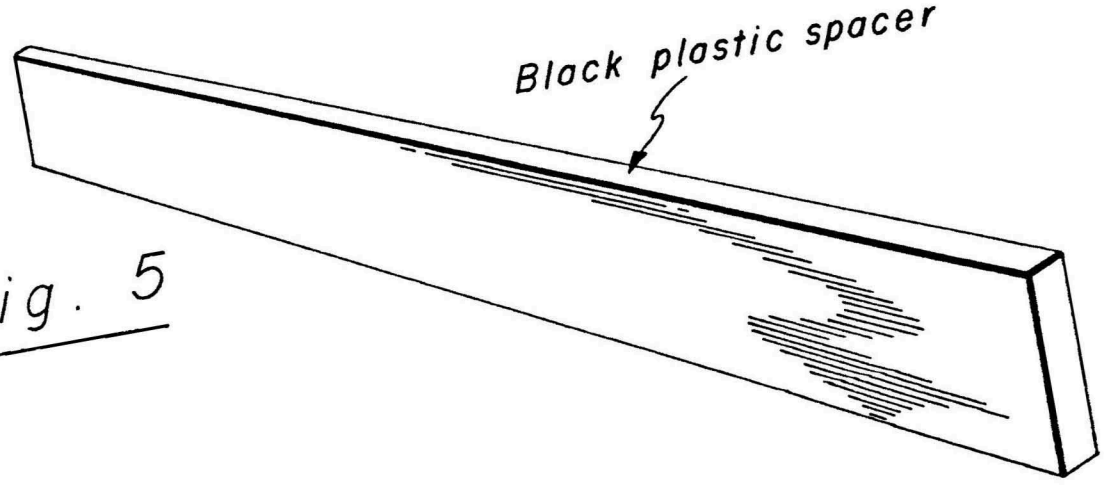

Fig. 5

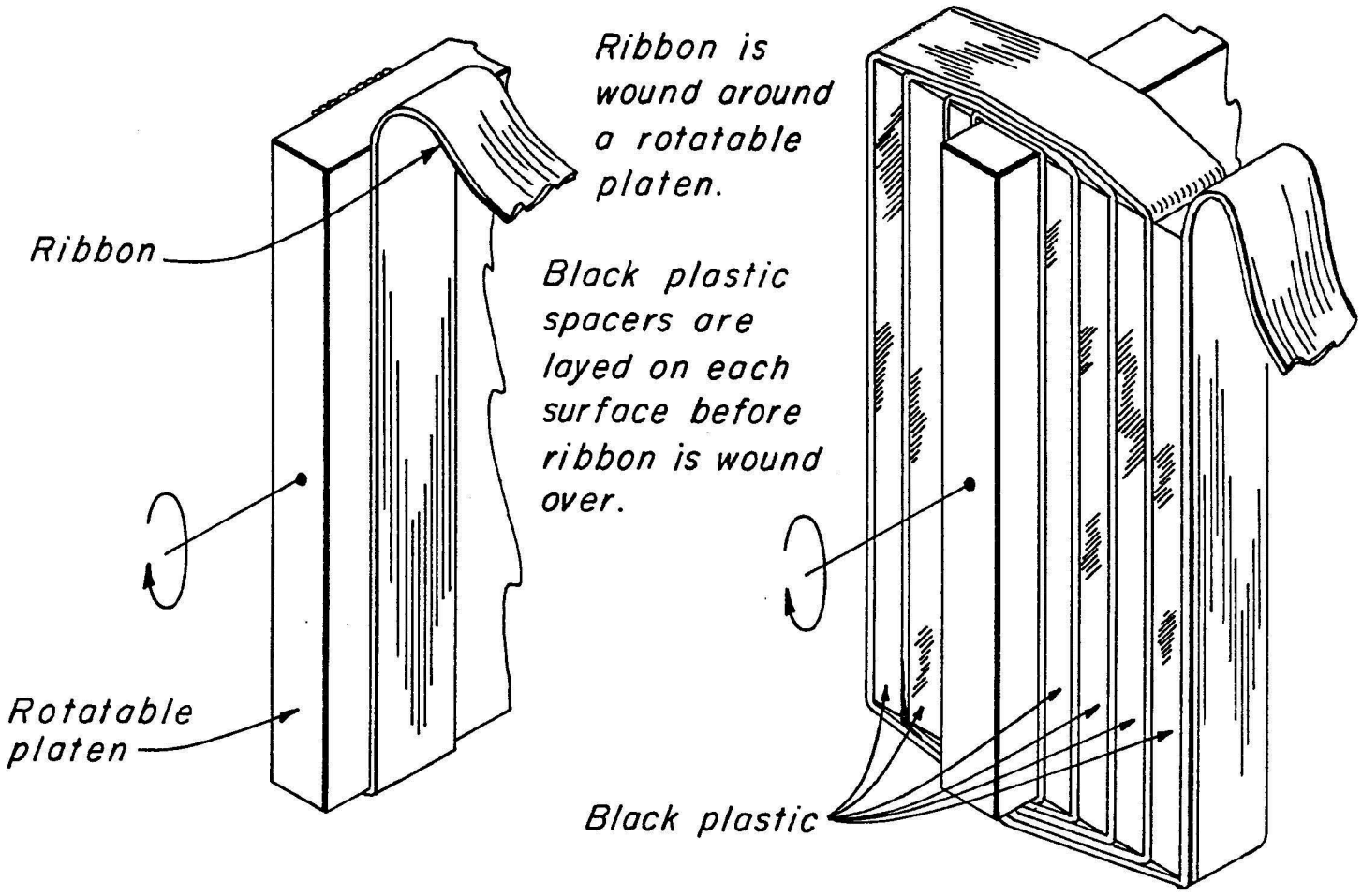
Ribbon is wound around a rotatable platen.
Ribbon
Black plastic spacers are layed on each surface before ribbon is wound over.
Rotatable platen
Black plastic

Fig. 6

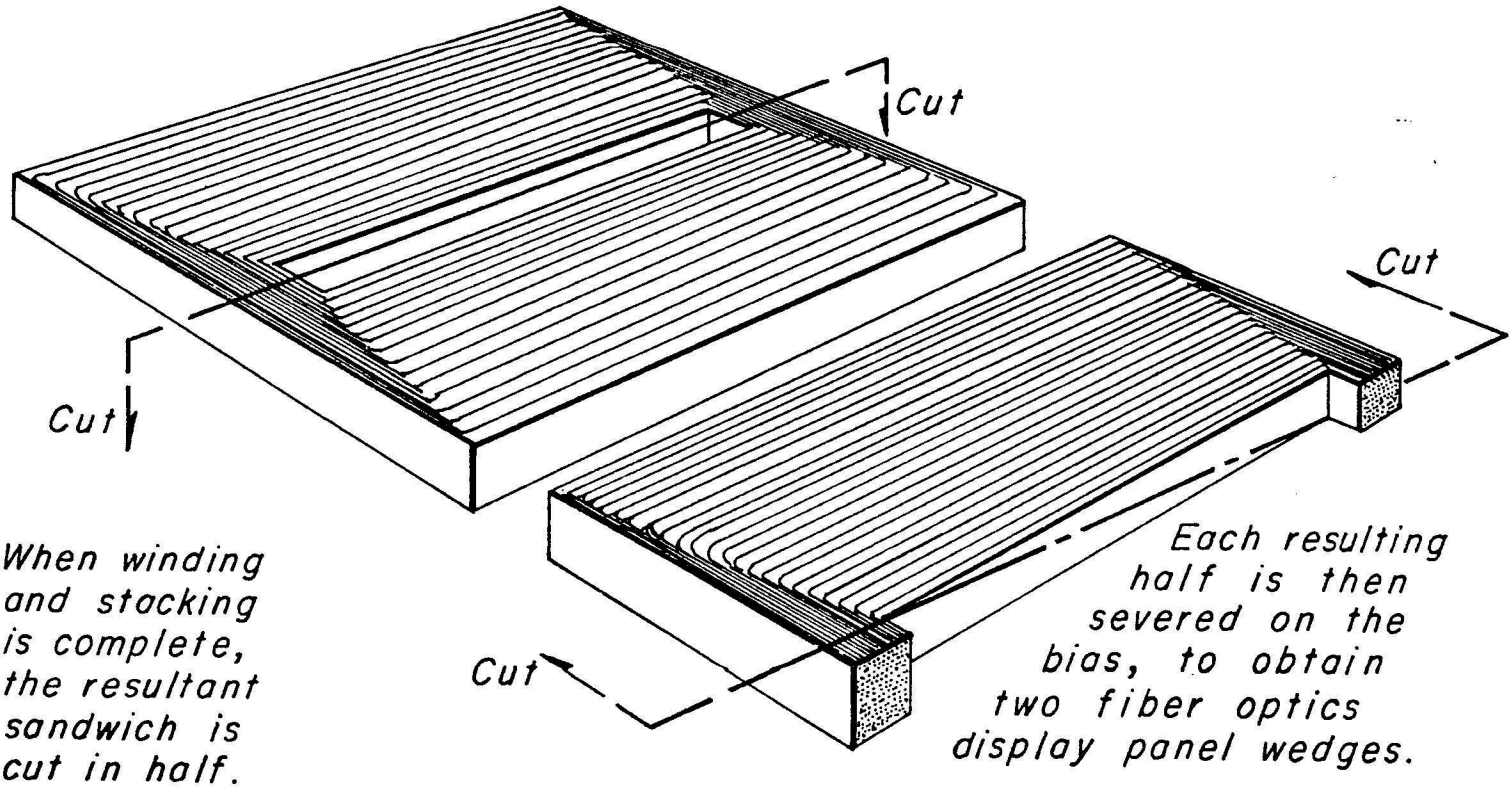
Cut
Cut
Cut
Cut
When winding and stacking is complete, the resultant sandwich is cut in half.
Each resulting half is then severed on the bias, to obtain two fiber optics display panel wedges.