UNIVERSITY OF ARIZONA
COLLEGE OF BUSINESS AND PUBLIC ADMINISTRATION

In 1980, the College of Business and Public Administration set the objective of becoming recognized as one of the top management schools in the United States. The College has made remarkable progress in its quest for excellence in research, scholarship and public service.

One of the nation's foremost organizational behaviorists now heads the Management Department. In the field of management information systems, the MIS department is regarded as one of the top five in the U.S. In finance, the faculty is developing national visibility in the research areas of bonds and other business, municipal and consumer debt instruments.

New efforts are being developed in support of the private market economy and entrepreneurial enterprise. The College is consistently competing for faculty with the best management schools and are winning a share in the competition. The College of Business and Public Administration is making positive progress and is regarded around the country as a college headed towards the top tier of management schools.

Enrollment at the College consists of about 5,500 students; 700 at the graduate level. It offers programs leading to the Bachelors, Masters and Ph.D. degrees in such areas as Accounting, Business Administration, Economics, Finance, Health Services Administration, Management Information Systems, Marketing, Operations Management, Personnel, Public Management, and Urban Planning.

Additionally, the College provides programs for executives including the Executive Development Course, now in its 19th year, serving management executives throughout the U.S. and many from overseas.

The College publishes Arizona Review, a semi-annual publication on timely business issues; Arizona's Economy, a monthly newsletter on regional economic information; and Progress, a semi-annual publication about the College, its faculty, students, staff and alumni.

Leading executives from across the country make up the College's National Board of Advisors. These individuals have organized to assist the College in achieving its objective of becoming one of the nation's leading instituions for quality research and education in management. The group acts as a communications liaison between the management community and the College and aids the College in developing the resources required to achieve its objectives.

See attached Appendix C for biographical information for the College of Business and Public Administration personnel.

UNITED STATES DEPARTMENT OF COMMERCE
The Assistant Secretary for Economic Development
Washington, D.C. 20230

04 MAY 1984

MEMORANDUM FOR: D. Bruce Merrifield
Assistant Secretary for Productivity,
Technology and Innovation

FROM: J. Bonnie Newman
Assistant Secretary
for Economic Development

SUBJECT: Proposal to Develop Instruction Course for
Federal Laboratory Employees

In your April 11 memorandum, you asked that I assess the funding potential of a proposal to develop an instruction course for federal laboratory managers and researchers on the "importance of invention awareness and the process of commercial innovation." You also attached a copy of an EDA preliminary review prepared earlier this year.

My staff advises me that the earlier review was based on a proposal submitted in April 1983 by the Research Corporation. That proposal requested support to provide training and other assistance for patent administrators at 10 major research universities to improve university administrators' and faculties' commercialization skills.

The shift from developing a training course for university staff to developing one for federal employees is significant. In the past, the Department's Financial Assistance Review Board has rejected project proposals that primarily benefit federal staff. Moreover, when EDA develops courses for or trains its employees, administrative (salaries and expenses) funds are used, not monies appropriated for our technical assistance or other programs. A comparable approach for a training course such as that you propose would be to finance it with the administrative funds of the agencies associated with the federal laboratories involved.

Given the thrust of your proposal, I do not believe EDA support would be appropriate. I should note that EDA is currently funding a project designed to establish effective working relationships among federal laboratories, universities, and cities for the purpose of generating jobs and income in the private sector.

RECEIVED
MAY 8 1984
D. BRUCE MERRIFIELD

PROPOSED AWARD TO RESEARCH CORP.

It is proposed to award a cooperative agreement to Research Corp. to develop and test an innovation awareness program for Federal laboratories. The choice of a cooperative agreement is based of Sec. 6. of the Federal Grant and Cooperative Agreement Act (P.L.95-224, 41 U.S.C. 505).

The principal purpose of the award is to stimulate the flow of Federal technology to the private sector. This purpose is authorized and mandated by the Stevenson-Wydler Technology Innovation Act (P.L. 96-480). While the laboratories and their employees can be expected to receive some benefit, the principal purpose is to help parties from the private sector obtain rights to use Federal inventions.

It can be argued that the Government can benefit from the award, so this is a case where the principal purpose test must be applied literally. If the purpose were to benefit the laboratories, a procurement contract would be required by 96-517. But the award could not be justified and would not be made on the basis of Government benefit or use.

Commerce (EDA/OPTI) plans to participate in the development and evaluation of the materials produced, so substantial involvement is anticipated.

Research Corporation

6840 East Broadway Boulevard
Tucson, Arizona 85710-2815
Telephone (602) 296-6400

George M. Stadler
Executive Vice President

June 14, 1984

Mr. Norman Latker
Director for the Office of
Patent Policy
U.S. Department of Commerce
Room 4816
14th and Constitution N.W.
Washington, D.C. 20230

Dear Norm:

It has come to my attention in conversation with Department of Commerce Office of Productivity, Technology and Innovation staff that our proposal to the Department for support of, "A Program to Enhance the Commercialization of University Technology," is again under consideration (copy enclosed). This is a propititious time for the activity we have proposed to be undertaken with two basic modifications. The first results from careful examination of events since our proposal was forwarded in June of 1983. We were originally focused on increasing the commercialization of results of federally funded research undertaken within universities. In the last year, universities have initiated needed commercialization (patenting and licensing) activities much more quickly than we had anticipated. During the same period, evaluation of legistation passed to foster commercialization initiatives within federal laboratories, the Stevenson-Wydler Act of 1980, suggests that the real problem is effective commercialization/utilization of federally funded research results from federal laboratories. Our proposal should, therefore, include but not focus solely on universities. Rather, a central focus will be on the federal laboratories and the potential audience, the private sector, for their transfer activities.

A second modification is suggested to strengthen management/oversight of the proposed activity. This modification would include a follow-on step in the basic approach -- evaluation of our commercialization skill enhancement program at national laboratories. This evaluation would determine if increased availability of new technologies to the private sector has resulted from the first contract year training activity.

We would be happy to resubmit our proposal making the appropriate modifications and budget changes as needed to address the challenges at hand.

I look forward to your comments.

Very truly yours,

George M. Stadler

GMS/sk

Enclosure

cc: Dr. Bruce Merrifield
Dr. John P. Schaefer
Dr. Donald M. Coyne

A PROPOSAL TO

THE DEPARTMENT OF COMMERCE

FOR SUPPORT OF A

PROGRAM TO ENHANCE THE COMMERCIALIZATION

OF UNIVERSITY TECHNOLOGY

SUBMITTED BY: Research Corporation
6840 E. Broadway Boulevard
Tucson, Arizona 85710

Requested Starting Date:	June 1, 1983
Funding Requested:	$182,615.00
Duration of Program:	18 Months
Date Submitted:	April 25, 1983

PRINCIPAL INVESTIGATOR:

GEORGE M. STADLER, Executive
Vice President

PROGRAM DIRECTOR:

DR. DONALD M. COYNE, Associate

APPROVED:

DR. JOHN P. SCHAEFER, President

Requested Starting Date: June 1, 1983

TABLE OF CONTENTS

OBJECTIVES..... 1

BACKGROUND..... 3

PURPOSE OF THE PROPOSAL..... 4

APPROACH..... 5

ADDITIONAL/FUTURE ACTIVITIES..... 7

SIGNIFICANCE..... 8

RESOURCES REQUIRED.....10

TIMING.....14

INFORMATION ABOUT RESEARCH CORPORATION.....15

OBJECTIVES

The primary purpose of this program is to establish a basis for Cooperative Agreement between Research Corporation ("RC") and the Department of Commerce ("DOC"). The underlying goal of the Cooperative Agreement would be to increase U.S. competitiveness and productivity by taking full advantage of the basic research structure in American universities and our national laboratories.

Some specific areas of mutual interest are:

1. Enhanced patent awareness and commercialization alternatives for educational institutions and the national laboratories;

2. Earlier and more widespread identification of inventive concepts resulting from government supported research;

3. Expanding the array of commercialization techniques available to handle basic technology to include "non-traditional" transfer modes like research and development limited partnerships ("RDLP's"), venture capital, joint venture, new company start-ups, etc.;

4. Help in "bridging the gap" and thus facilitating university-industry collaboration;

5. Initiate and coordinate commercialization activities between universities and national laboratories and their local/regional small and medium-sized businesses;

6. Establish a basis for a "facilitator" (RC) in helping universities and the national laboratories implement the above-mentioned activities;

7. Help in developing well-trained university and national laboratory patent administrators and provide them with the proper support and back-up needed to run successful technology commercialization programs;

8. Demonstrate the "facilitator" role through an initial Pilot Project with a test group or research universities;

9. Plan and organize regional and/or national seminars based upon the above-mentioned Pilot Project for universities and national laboratory patent administrators;

10. Establish an Institute which would be used for continual training, commercialization skill enhancement, and as a dialog for parties interested in facilitating university-industry research and commercialization relationships;

11. Systemize regional small business and regional economic development networks so as to accelerate the "time to market" of university and national laboratory-developed products, processes and services;

12. Arrange a forum so that members of the brokerage/investment community can interact with organizations and/or individuals responsible for structuring RDLP's in order that acceptable sales terms and conditions could be negotiated and structural RDLP formats standardized (this kind of understanding would not only expedite the RDLP process but would also reduce costs to both parties); and

13. Establish an Operational Center(s) where university and national laboratory patent administrators (and also small businesses) could get proper advice (consultation) on the use of RDLP's and other "non-traditional" commercialization options and, in addition, have RDLP completely structured and marketed.

businesses) could get proper advice (consultation) on the

BACKGROUND

In December of 1977 RC completed a three-year study for the National Science Foundation ("NSF") and the National Bureau of Standards ("NBS"). The study was aimed at developing and testing procedures to enhance the patent awareness of academic researchers.

The results of this program were very positive as reflected by the large increase in the number of invention disclosures that were stimulated. A manual was produced based on the RC developed procedures for stimulating invention disclosures with the intent of this manual being used as a guide for university administrators who wish to set up in-house patent programs. (Both the initial proposal and the resulting manual are attached as Appendix 1.)

Unfortunately, the NSF program was neither expanded to other universities nor was a mechanism established which could be used to provide continual training and the enhancement of commercialization skills for the university patent administrator. As a result, procedures for invention stimulation were available but proper training in their use and periodic commercialization skill updating were taken for granted. Further, the necessary knowledge-base for the evaluation of disclosures for their patentability and marketability, the filing of prosecution patent applications and the licensing (commercialization) of issued patents were not treated by the NSF program and, thus, were not generally available to most university patent administrators.

RC's proposed Cooperative Agreement with the DOC has been designed to take advantage of the proven procedures for stimulating invention disclosure established during the NSF program and the lessons learned from the problems that have developed since the completion of the program.

Technological advancement is the key to our nation's sustained economic growth. Our universities represent the basic research establishment from which will come the intellectual seed for new industrial technology which will help stimulate our economic growth. We must implement a program that will help maximize our ability to identify inventions resulting from basic research so that these inventions can be made widely and promptly available for this purpose.

patent applications and the licensing (commercialization)

PURPOSE OF THE PROPOSAL

As an initial step, in our proposed Cooperative Agreement with DOC, RC plans to initiate a "Pilot Project" with a selected group of universities. The Pilot Project is designed to demonstrate the effectiveness of a "facilitator" (RC) and to help establish effective campus patent administration in order to encourage the early identification of new ideas with commercialization potential and to expand the array of available commercialization mechanisms to include "non-traditional" approaches such as RDLP's.

Further, it is RC's intention that the experiences gained during the Pilot Project would be extended to an expanded group of universities, the national laboratories and interested small businesses. By providing both awareness and the means for early commercialization, it is hoped that the Pilot Project can contribute to increasing U.S. competitiveness and productivity.

APPROACH

RC in cooperation with DOC will select ten major research universities for inclusion in this Pilot Project. The group will be a representative cross section of this nation's university, health science and medical schools and technology institutes so that various awareness, early invention identification techniques, and "traditional and non-traditional" commercialization approaches can be attempted and evaluated. Several institutions meeting these criteria have already been contacted by RC and they have expressed a desire to participate in this initial Pilot Project.

RC will design programs to meet the specific needs of each participating university that will greatly extend any present internal patent management program that the universities may have. RC will work with the selected university administrator who is responsible for patenting and licensing. This individual(s) will play an integral role in tailoring an enhanced program that will include: patent awareness for faculty, early invention identification, on-campus assistance, regular communication with faculty members, help in attracting industrial research support, and technology commercialization through "traditional" and "non-traditional" transfer approaches.

The activities undertaken by RC will include:

1. A Training Seminar for university patent administrators.

2. A specially designed patent-awareness program for faculty.

3. On-campus representation for regular meetings with faculty members to discuss questions concerning technology, commercialization and to help university patent administrators establish the one-to-one contact necessary for early invention identification.

4. Provide written reports for guidance on all submitted disclosures.

5. Use flexible methods to achieve development and commercialization of university inventions.

6. Undertake international commercialization and transfer of university technologies with the intention of positively affecting the U.S. balance of trade.

7. Help in attracting support for those research initiatives which appear to have commercial potential.

8. Create a better interface for the transfer of technology to local and regional businesses which are in close proximity to the participating universities.

A more complete description of these efforts can be found in Appendix 2 which contains the document entitled Complete Patent Management - A New Option Under Research Corporation's Invention Administration program.

A key objective to this overall process will be to establish an effective patent focus (administrator) at each of the participating universities and to provide the individual with the proper back-up needed to operate an effective technology commercialization program.

It is anticipated that the Pilot Project will be implemented over an eighteen-month period and will contain at least the following tasks:

1. Initial meetings involving RC, DOC and university administrative personnel to explain the basis of the Pilot Project, define its goals and objectives, and to implement a preliminary research review of the participating universities.

2. Preparation of awareness, early invention identification, and training seminar materials and procedures.

3. Conduct an initial awareness/training seminar for the selected university patent administrators.

4. Provide continuing on-campus support for the university patent administrators and help them interface better with their faculty inventors.

5. Identification of technologies that lend themselves to development and commercialization through RDLP's.

6. Preparation of a final report/working manual summarizing and evaluating the Pilot Project's procedures.

ADDITIONAL/FUTURE ACTIVITIES

RC is convinced that by helping to build a strong university focus (Patent Administrators) and providing continual means of education and commercialization skill enhancement a sound base will be established so that maximum use of America's basic research structure is realized. Thus, it is our intention to build on the experiences gained during the Pilot Project and to expand the use of these procedures with other universities, our national laboratories and interested small and medium-sized businesses. In addition, RC and DOC would simultaneously evaluate the merits of:

1. Planning and organizing a national workshop/seminar based on the experiences gained during the Pilot Project for other university and national laboratory patent administrators.

2. The establishment of an Institute which would provide a continual training base for patent administrators as well as a center for seminars aimed at stimulating dialog between parties interested in facilitating university-industry research and commercialization relationships.

3. Systemizing regional small businesses and regional economic development networks so as to accelerate the "time to market" of university developed products, processes and services for the benefit of these local businesses.

4. The establishment of an Operational Center where university and national laboratory patent administrators (and interested small businesses) could get proper advice and/or help in structuring and marketing RDLP's and other "non-traditional" commercialization approaches.

tionships.

SIGNIFICANCE

Broadly, it is RC's premise that the enhancement of patent awareness, early invention identification and the use of "traditional" and "non-traditional" commercialization techniques at educational and scientific institutions (and small businesses) will result in the following:

1. The country as a whole will obtain a higher return on this nations research investment. As new products and processes reach the marketplace, new enterprises develop providing increases in employment and tax revenue. Research funding must be analyzed and mined for the inventions that our funding has generated so that a maximum national benefit may be obtained.

2. Help local and regional industry become involved with university and national laboratory technologies and more fully utilize this inherent reservoir of technical talent to help them solve their own problems and meet their future challenges.

3. Retention of foreign patent rights through early identification and evaluation of inventions before publication. All to often these rights are lost by premature public disclosure. Foreign patents can enhance the inflow of dollars both to the U.S. patent holder in the form of royalty income as well as to the U.S. corporate licensee as profits and sales.

4. Improvement in the quality of life as a consequence of an increased number of inventions resulting from government sponsored basic research in the health and medical science field. Such inventions all to frequently lie fallow at present because medical researchers do not have an appreciation for the use of the patent system and feel their responsibility ends with publications of their research findings.

5. Provide feedback information which can be used as criteria in future programs for funding basic research. Those institutions and research workers which are most likely to produce the highest quality results will be more readily identified. In addition, the institutions and researchers will become more aware of the uses to which their work can be put for greater public benefit.

The Pilot Project which is proposed here is designed to accomplish at minimum the following:

1. Develop an awareness that inventions of value to the public may be inherent in academic research projects.

2. Define in general terms the factors that make an invention both patentable and marketable.

3. Develop an understanding that publishing and patenting are compatible and not irreconcilable opposites as is frequently felt to be the case by many academic researchers.

4. Presentation of the role of the patent system in developing new products and processes for the public benefit.

5. Provision for testing various methods ("non-traditional") other than patents for commercializing university technologies.

6. Encouragement of a closer working relationship between university patent administrators and faculty researchers through the development of the knowledge and understanding of the university's patent policy and administrative procedures and responsibilities.

7. Development of a broader understanding of commercialization methods through presentation of actual case histories, including economic and other benefits accruing to the general public, the government, the university and the inventors.

8. Development of appropriate and more effective mechanisms for stimulating and identifying early inventive concepts.

9. Development of appropriate and more effective mechanisms for evaluating inventive concepts resulting from universities.

The Pilot Project which is proposed here is designed to accomplish at minimum the following:

1. Develop an awareness that inventions of value to the public may be inherent in academic research projects.

2. Define in general terms the factors that make an invention both patentable and marketable.

3. Develop an understanding that publishing and patenting are compatible and not irreconcilable opposites as is frequently felt to be the case by many academic researchers.

4. Presentation of the role of the patent system in developing new products and processes for the public benefit.

5. Provision for testing various methods ("non-traditional") other than patents for commercializing university technologies.

6. Encouragement of a closer working relationship between university patent administrators and faculty researchers through the development of the knowledge and understanding of the university's patent policy and administrative procedures and responsibilities.

7. Development of a broader understanding of commercialization methods through presentation of actual case histories, including economic and other benefits accruing to the general public, the government, the university and the inventors.

8. Development of appropriate and more effective mechanisms for stimulating and identifying early inventive concepts.

9. Development of appropriate and more effective mechanisms for evaluating inventive concepts resulting from universities.

RESOURCES REQUIRED

Support of the Pilot Project is dependent upon obtaining two commitments: direct grant support from the federal government to help RC defer some of the costs associated with the Pilot Project and, secondly, the direct and continued participation of certain DOC employees in the Pilot Project.

Cost estimates and Budget for the necessary direct grant to RC are outlined below:

Personnel Costs

Overall costs for the Pilot Project are based on the following hourly manpower changes for RC personnel:

Supervisory Personnel	$75.00
Associates	$50.00
Support Staff (secretarial)	$18.00

These hourly rates are inclusive of direct labor, overhead and general and administrative expense. Since RC is a non-taxable, non-profit foundation, there is no allowance for either profit or a management fee in these rates.

Costs for Travel to Institutions and/or the Seminar Site

These costs have been estimated and averaged based on one professional traveling from (or to) Tucson, Arizona on a per diem basis.

Air Fare	$600.00
Motel	65.00
Meals	35.00
Misc. (Ground Transporation)	50.00
TOTAL	$750.00

Cost of Pilot Project

The following costs are estimated for the performance of the Pilot Project at ten selected universities.

1. Initial meetings involving RC, DOC and high level university administrative personnel in order to explain the basis of the Pilot Project, define goals and objectives and to begin a preliminary University Research Review:

Average two-day travel	$ 900.00
Institutional Visit (10 hrs. @ $50)	500.00
Study and Analysis of Data (4 hrs. @ $50)	200.00
Support Staff (6 hrs. @ $18)	108.00
TOTAL	1,608.00
Total for Ten University Trips:	$16,080.00

2. Preparation of awareness, early invention identification, and training seminar materials and procedures:

Supervising Personnel (25 hrs. @ $75)	1,875.00
Associate (200 hrs. @ $50)	10,000.00
Support Staff (100 hrs. @ $18)	1,800.00
Preparation of visual aids	1,000.00
Handout material	3,000.00
TOTAL	$17,675.00

3. Initial awareness and training seminar for the selected university patent administrators (to Tucson Seminar Site):

Average three-day travel	$ 1,050.00
Rental of conference Center	150.00
TOTAL	$ 1,200.00
Sub-total for ten university (two representatives per university)	$24,000.00

Supervising associates (20 hrs. @ $75)	$ 1,500.00
Associate (80 hrs. @ $50)	4,000.00
Support staff (40 hrs. @ $18)	720.00
Miscellaneous meeting expenses and professional stipends	7,500.00
Sub-total	14,720.00
TOTAL	$38,720.00

4. Provide continuing on-campus support for university patent administrators and for interface with university faculty inventors:

(Approximately 20 days will be scheduled for "on-campus" interface at each participating university over the course of the Pilot Project -- assuming an average of four, five-day trips per university.)

Average five-day travel	1,350.00
Institutional visit	
Associate (20 hrs. @ $50)	1,000.00
Support Staff (10 hrs. @ $18)	180.00
Sub-total	$ 2,530.00
Total of four, five-day trips per 10 universities	$101,200.00

5. Preparation of a final report/working manual which would summarize the Pilot Project:

Supervising Associate (20 hrs. @ $75)	1,500.00
Associate (80 hrs. @ $50)	4,000.00
Support staff (80 hrs. @ $18)	1,440.00
Miscellaneous	2,000.00
TOTAL	$ 8,940.00

Institutional visits

Summary of total Pilot Project costs:

Initial meetings	$ 16,080.00
Preparation of materials	17,675.00
Training seminar	38,720.00
Continuing campus support	101,200.00
Final Report	8,940.00
	$182,615.00

As previously mentioned, in addition to the direct grant support, the involvement of certain DOC personnel would also be necessary to meet all of the objectives of this first step in the envisioned Cooperative Agreement.

Further, RC will be cost sharing expenses for the programs that go beyond those which have been requested. RC will assume all costs involved in technology evaluation, patenting, licensing, license management and foreign filing as per our normal Complete Patent Management Agreement with universities.

TIMING

RC believes that an 18-month Pilot Project would provide
nt time for the purpose of training and gathering sufficient
evaluation. Further, because of the various cycles of activity
ed with the academic year, an early June 1983 starting date
most desirable.

RC and DOC personnel would use the time period between June and
er of 1983 to prepare the awareness and training seminar materials
addition would conduct the initial university visits and planning/
meetings with participating university administrators. The
ss and training seminars would be scheduled for September with
low-up "on-campus" support effort being scheduled at appropriate
ls over the next 12 months.

If the above schedule could be met, RC would then attempt to
final report available for distribution to other universities,
ment laboratories, and interested small businesses by the end of

Timing the Pilot Project to begin in June of 1983 would also
RC and DOC to explore the possibility of initiating other projects
ated with the Cooperative Agreement in parallel with the Pilot
t.

INFORMATION ABOUT RESEARCH CORPORATION

Research Corporation was founded in 1912 by Frederick Gardner Cottrell, a professor of physical chemistry at the University of California at Berkeley, the inventor of the electrostatic precipitator. Cottrell's goal, in essence, was to make practical use of discoveries resulting from university research and to apply resources thus generated to further the advancement of science. RC is incorporated in New York State under the not-for-profit corporate law, and has offices in New York City and Tucson, Arizona.

RC's first objective is carried out through the Invention Administration Program, which evaluates inventions made at scientific and educational institutions. RC has servicing agreements with over 280 universities and non-profit institutions to handle their inventions and research projects that show commercial potential. These agreements generally provide for the division of income on a basis of sixty percent to the university and inventor and forty percent to RC.

Its patent services to universities include the location and identification of technology concepts, and the evaluation of the economic feasibility of such concepts, the prosecution of applications for patents have not already been obtained, and licensing and administering the patents. RC generally does not engage in research, development, manufacturing or product marketing activities but intends that such activities be undertaken by its licensees. The major product and process areas of RC's technology are medical-pharmaceutical, agricultural, animal health, chemicals, energy and electronics. RC evaluates on average 400 disclosures each year of which it accepts for handling approximately 10 percent. RC currently administers about 500 active inventions and 200 licensed inventions. Royalties generated from these technologies will reach the $10 million per year level in 1983.

The advancement of science, RC's second objective, is carried out through grants-in-aid for basic research in the natural and physical sciences. Through these programs RC assists significant research proposals by faculty members at colleges and universities throughout the U.S. and Canada. These programs aim at young university researchers because they are yet unknown as established researchers, and generally cannot successfully compete for Federal funds. Most of RC's grantees, after completing initial projects under its patronage, are able to win Federal money for further projects. Approximately 300 research grants are awarded each year.

g members of the science and technology community who
research under grants from RC are 17 Nobel Prize
istinguished scientists, whose first research grants were
by RC, include the five chemists (Herbert C. Brown,
Robert B. Woodward, Manfred Eigen and William N. Lipscomb,
sicists (Ernest O. Lawrence, Isdor I. Rabi, Felix Bloch,
ell and Robert Hofstadter) and seven medical researchers
dall, Edward L. Tatum, Severo Ochoa, Feodor Lynen,
obert W. Holley and Max Delbruck).

has a professional staff of twenty-five scientists,
chnology transfer/marketing specialists, patent attorneys
re experts. It also retains several business/scientific
nd legal firms in the areas of patent, tax, and corporate

FIBER OPTICS DISPLAY LIMITED PARTNERSHIP

$3,200,000

Proposed Offering of Limited Partnership Interests

BROKER/DEALER INFORMATION SUMMARY MEMORANDUM

This memorandum summarizes an offering of twenty Units of Limited Partnership Interest of $160,000 each in FIBER OPTICS DISPLAY LIMITED PARTNERSHIP, a Florida limited partnership. A Confidential Memorandum describing the investment in detail is being made available. This summary memorandum does not constitute an offer to purchase the Units described. It has been prepared for the convenience of broker/dealers and does not purport to set forth all aspects of the offering and, in particular, the risks of the offering. An offering can be made only with a Confidential Memorandum.

THE PARTNERSHIP

FIBER OPTICS DISPLAY LIMITED PARTNERSHIP is being organized for the purpose of developing and exploiting a unique fiber optics display panel. A corporate general partner will be formed and capitalized by University Resources, Inc.
The Partnership will fund research and development on the display panel to obtain a functioning prototype thereof and to develop and improve a method of inexpensively fabricating the display panel in quantity. If successful, the display panel, and its associated technology, will be licensed to industry or otherwise exploited. The display panel and a method of making it are covered by patents owned by New York Institute of Technology ("NYIT"). A crude feasibility model of the fiber optics panel was recently made and demonstrated by the NYIT Science and Technology Research Center ("NYIT/STRC") in Dania, Florida. The research and development funded by the Partnership will be performed under contract by NYIT/STRC.

The fiber optics display panel to be developed has a thin flat configuration and is anticipated to have immediate potential as a high contrast image magnifier for presenting movies, slides, and microfilm, as well as anticipated near term potential for use in a high-contrast flat screen television or computer terminal display. Ultimately the fiber optics display panel is anticipated as being a key component of a high-contrast "hang-on-the-wall" flat screen television system that does not require cumbersome light

projection equipment. In addition to its thin flat configuration and expected inexpensive manufacturing cost, the fiber optics display panel exhibits superior performance in an environment of high ambient light which allows it to be comfortably viewed in a bright room or outdoors. It is also rugged and not subject to the risk of breakage that characterizes glass tube displays.

CAPITALIZATION AND TERMS OF INVESTMENT

The Partnership is offering twenty Units of Limited Partnership Interest for a total of $3,200,000. Fractional Units may be offered at the discretion of the Partnership. Payments will be made in installments as follows:

$40,000.....At the time of subscription
$60,000.....May 1, 1982
$60,000.....August 1, 1982

Promissory notes will be given for the future installments and secured by letter of credit or other security acceptable to the Partnership. Interest at the rate of 9% per annum installment balance.

THE PARTNERSHIP AGREEMENT

The Partnership Agreement allocates _____% of the revenues and losses to the Limited Partners and _____% of the revenues and losses to the General Partner.

NYIT TECHNOLOGY AND PATENT RIGHTS

NYIT owns U.S. and foreign patents and patent applications pertaining to the fiber optics display panel, and certain technology associated with the building of the existing feasibility model of the display panel. U.S. Patent No.'s 4,116,739 and 4,208,096 respectively cover the display panel itself and a method of making it, and there are corresponding patents or patent applications in Canada, Britain, Holland, Japan, and West Germany.

PARTNERSHIP/NYIT R & D CONTRACT

The Partnership will enter into a one year contract with NYIT/STRC pursuant to which NYIT/STRC will perform research and development work on the NYIT fiber optics display panel. The research and development will have two main objectives: to build, improve, and test pre-production prototypes of the display panel; and to develop and improve methods of producing the display panel in quantity, including experimental work on equipment for such mass production. As a condition for entering into this commitment to perform a concentrated and intensive one year research and development effort, including the necessary commitment of staff and facilities, NYIT/STRC shall be

paid the full contract amount in cash at the beginning of the contract. The Partnership shall borrow in 1981 the additional money (above and beyond the Limited Partner's 1981 capital contribution payment) necessary to make such full contract amount payment in 1981 to NYIT/STRC. The borrowing shall be repaid during 1982 from the Limited Partner's 1982 capital contribution payments. Each Limited Partner will be required to assume, in an individual capacity, a share of the Partnership borrowing, not to exceed the face amount of his promissory note to the Partnership, such assumption to be reduced by the Limited Partner's payment to the Partnership of his 1982 capital contribution payments.

Except for the cost of organizing and managing the Partnership, selling the Units, interest on borrowing, and a reserve for Partnership expenses, all of the Partnership funds shall be expended on the R & D contract. The R & D contract amount shall be $2,450,000.

Under terms of the R & D contract, the Partnership will retain 50% of the gross licensing royalties on any sales of the subject display panel, until the total royalties received by the Partnership equal two times the total capital contributions of all Limited Partners. Thereafter, the Partnership will receive 25% of said gross licensing royalties. The R & D contract further specifies that the Partnership will retain these same percentages of any other consideration received from exploitation (other than by licensing) of the subject display panel.

FEDERAL INCOME TAX CONSEQUENCE

The majority of Partnership funds will be expended in contracting for research and development during 1981, and this is anticipated to result in a loss to the Partnership in 1981. If there is no substantial income to the Partnership during 1981, there will be approximately $110,000 in losses allocated to each Limited Partnership Unit, a ratio of 2.75 to 1 of tax loss to cash investment in 1981. If the Partnership's future operations are not profitable, each Limited Partnership Unit may ultimately be entitled to additional deductions up to a total of approximately 90% of the Unit investment.

NYIT SCIENCE AND TECHNOLOGY RESEARCH CENTER (NYIT/STRC)

The NYIT Science and Technology Research Center in Dania, Florida, was established in 1975 and has been headed since that time by Dr. William E. Glenn, inventory of the subject fiber optics display panel. The present NYIT/STRC facility includes 10,000 square feet of office and scientific lab space plus approximately 1,000 square feet of fully equipped machine shop available at the site. NYIT/STRC

currently has 20 full time employees. Technology developed by the NYIT Science and Technology Research Center in the field of ultrasonic imaging has been successfully licensed to a large international company and the product is presently being commercially marketed worldwide.

Dr. Glenn, who invented most of NYIT's licensed ultrasonic imaging technology as well as the subject fiber optics display panel, is a former Vice President and Director of Research of CBS Laboratories, a division of CBS Inc. He holds a Ph.D. in electrical engineering from University of California at Berkeley. In 1978 he received an "Emmy" from the National Academy of Television Arts and Sciences as inventor of a device for improving the quality of television pictures. He has received numerous other awards for achievement in science, is a fellow of the Society of Motion Picture and Television Engineers, and holds 86 issued patents. Before his term of employment (1967 - 1975) at CBS, Dr. Glenn was a member of the staff at G. E. Research Labs where he developed a large screen television projector that is now commercially available.

The backgrounds of other NYIT/STRC personnel are available on request.

DISPLAY RESEARCH LIMITED PARTNERSHIP

Capitalization

Maximum: 20 units @ $160,000/Unit = $3,200,000

Could raise as:

5	units	@	$160,000	= $ 800,000
25	(½ units)	@	$ 80,000	= $2,000,000
10	(¼ units)	@	$ 40,000	= $ 400,000
				$3,200,000

Minimum: 15 units @ $160,000/Unit = $2,400,000

Could raise as:

2	units	@	$160,000	= $ 320,000
17	(½ units)	@	$ 80,000	= $1,360,000
18	(¼ units)	@	$ 40,000	= $ 720,000
				$2,400,000

OR

25	(½ units)	@	$ 80,000	= $2,000,000
10	(¼ units)	@	$ 40,000	= $ 400,000
				$2,400,000

DISPLAY RESEARCH LIMITED PARTNERSHIP
Anticipated Deductions (if no income)
[20 Units Sold]

Full Unit:

Date	Payment	Interest (@ 9%)	Deduction	
12/1/81	$40,000	------	1981:	$116,500
5/1/82	$60,000	$4,500		$ 7,400
			1982:	+$ 5,800-pers. int. ded.
				$ 13,200-total
8/1/82	$60,000	$1,350		
1983-86				$ 6,300

Half Unit:

Date	Payment	Interest (@ 9%)	Deduction	
12/1/81	$20,000	------	1981:	$ 58,200
5/1/82	$30,000	$2,250		$ 3,700
			1982:	+$ 2,900
				$ 6,600-total
8/1/82	$30,000	$ 675		
1983-86				$ 6,300

Quarter Unit:

Date	Payment	Interest (@ 9%)	Deduction	
12/1/81	$10,000	------	1981:	$ 29,100
5/1/82	$15,000	$1,125		$ 1,850
			1982:	+$ 1,450
				$ 3,300-total
8/1/82	$15,000	$ 340		
1983-86				$ 3,150

FIBER OPTICS DISPLAY PANEL

Market Size Considerations

(Related Products)

Consumption at Factory Level of Goods Shipped (Millions of $)

	U.S.		Western Eur.		Japan	
	1981	1984	1981	1984	1981	1984
TV Picture Tubes	874	1,017	1,326	no est.	1,012	no est.
TV Sets	4,203	4,577	6,327	" "	2,270	" "
Data Terminals	2,776	5,507	1,964	" "	1,404	" "

Source: Electronics Magazine 1981 World Forecast

Source: Electronics Magazine 1981 World Forecast

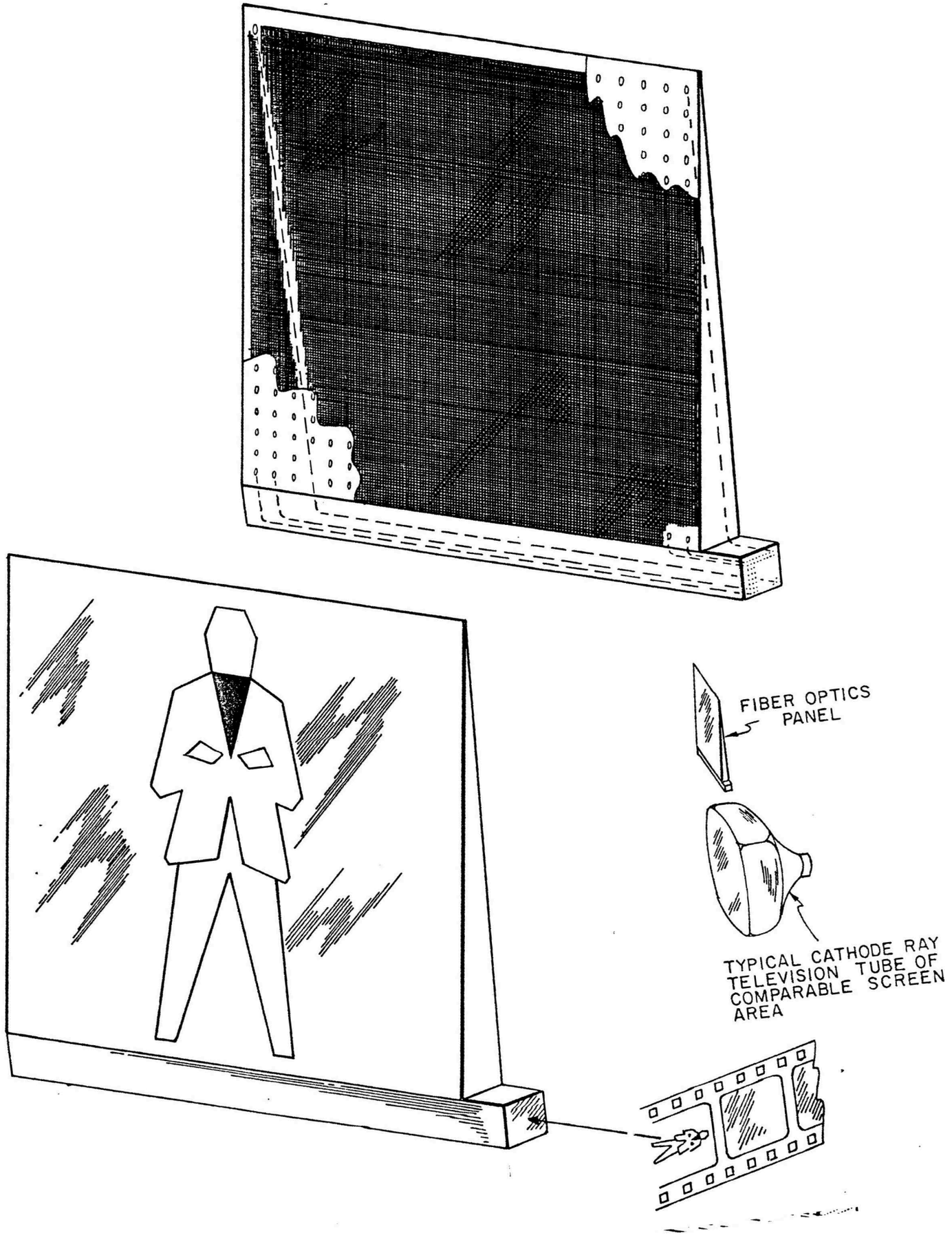
FIBER OPTICS PANEL
TYPICAL CATHODE RAY TELEVISION TUBE OF COMPARABLE SCREEN AREA

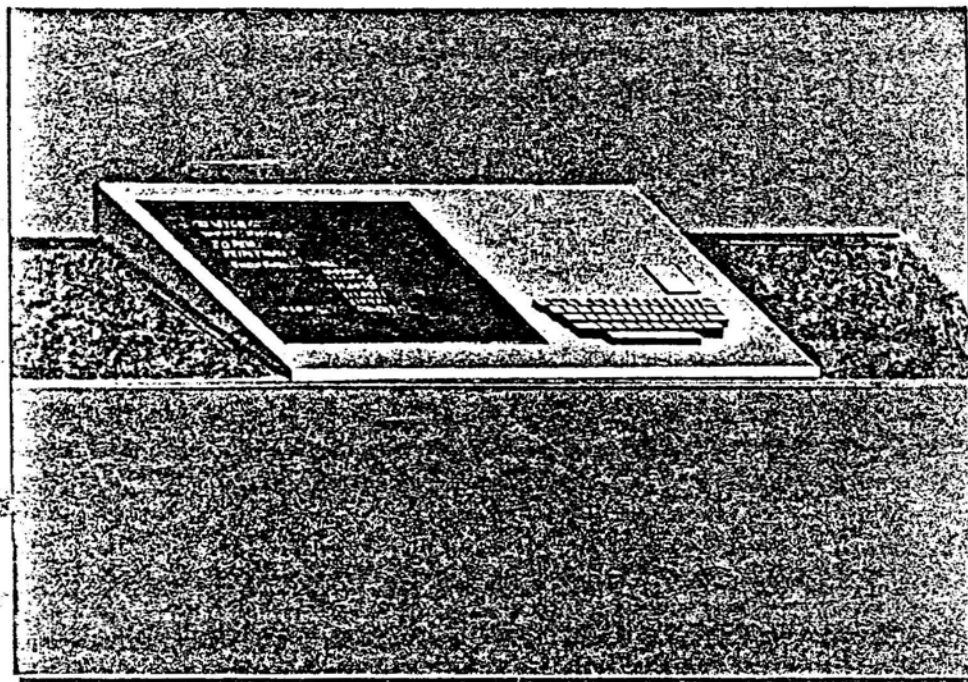

Proposed type of desk or tabletop unit using fiber optics display panel.

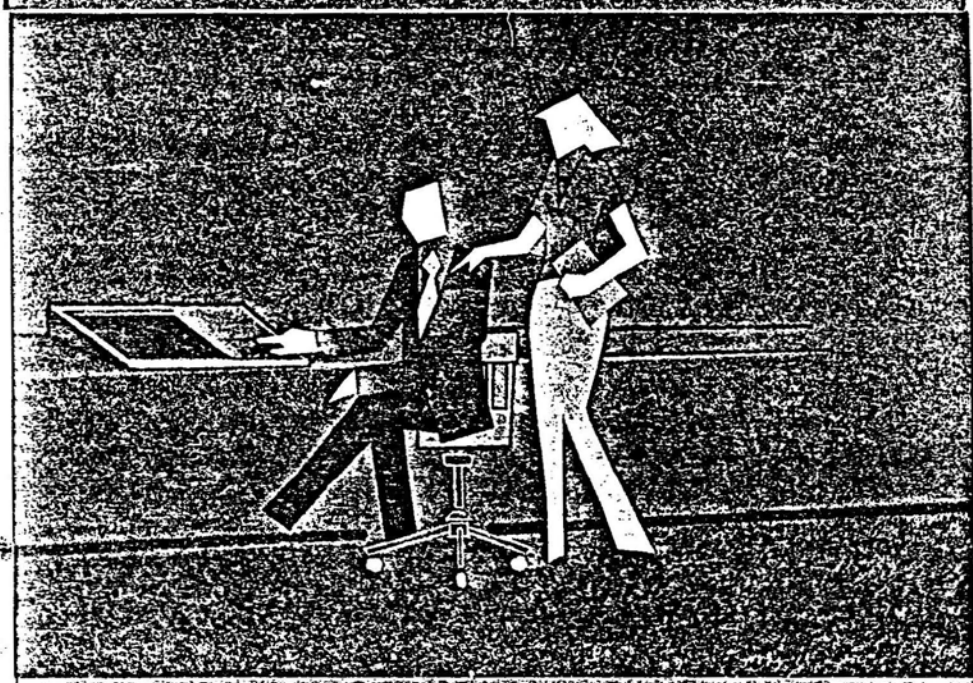

Same

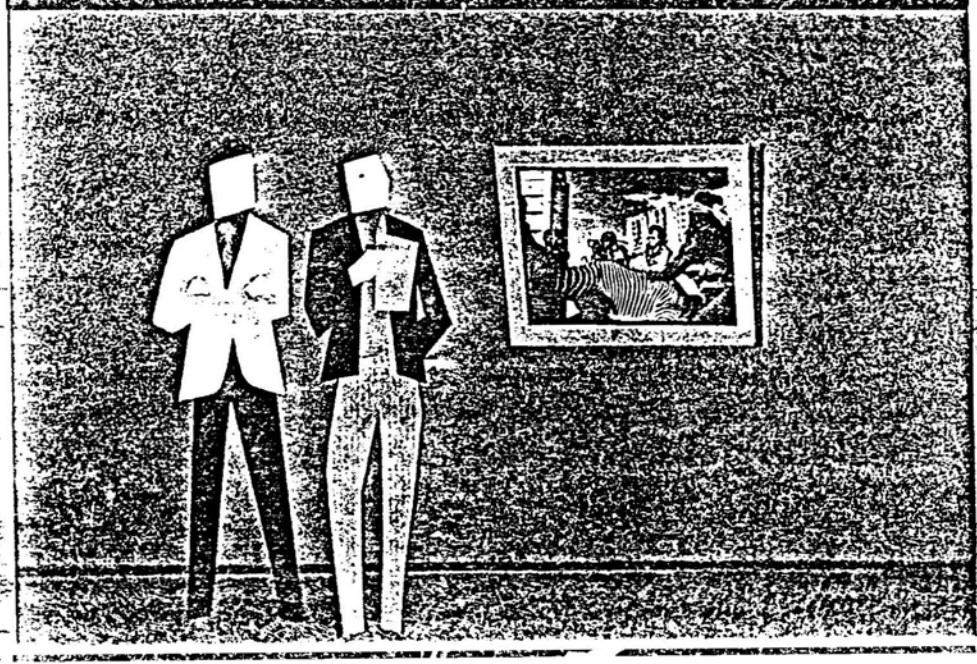

Proposed type of "hang-on-the-wall" television display using fiber optics display panel.

United States Patent [19]

Glenn

[11] 4,116,739

[45] Sep. 26, 1978

[54] METHOD OF FORMING AN OPTICAL FIBER DEVICE

[75] Inventor: William E. Glenn, Ft. Lauderdale, Fla.

[73] Assignee: New York Institute of Technology, Old Westbury, N.Y.

[21] Appl. No.: 745,187

[22] Filed: Nov. 26, 1976

[51] Int. Cl.[2] B65H 81/00; G02B 5/14

[52] U.S. Cl. 156/169; 156/173; 156/250; 350/96.25

[58] Field of Search ..... 156/174, 172, 175, 180, 156/396, 250, 169, 446, 433; 350/320, 96.25, 96 B, 96.28, 96.26, 96.27; 39/419 G; 242/7.02

[56] References Cited

U.S. PATENT DOCUMENTS

3,043,910	7/1962	Hicks, Jr.	156/167
3,402,000	9/1968	Crawford	350/96 B
3,585,705	6/1971	Allan	350/96 B
3,853,658	12/1974	Ney	156/180
3,871,591	3/1975	Murata	156/174
3,909,109	9/1975	Aurenz	350/96 B
3,954,546	5/1976	Aurenz	350/96 B

Primary Examiner—William A. Powell
Assistant Examiner—Michael W. Ball
Attorney, Agent, or Firm—Martin Novack

[57] ABSTRACT

The disclosure pertains to an optical display apparatus, or fiber optics magnification panel, and a method of making same. In accordance with the disclosed method, a plurality of substantially parallel relatively closely spaced optically conducting elongated strands, such as fiber optic strands, are wrapped about a spacer element. At least one additional spacer element is then positioned over the previously wrapped strands and the plurality of strands is rewrapped over the at least one additional spacer element in spiral fashion. The operation of positioning an additional spacer element over the previously wrapped strands and rewrapping the strands over the additional spacer element is then repeated a desired number of times. The resultant spirally wound construction is then severed substantially along the plane of the first-mentioned spacer element, and a resultant portion of this severing operation is angularly severed to form a pair of wedge-shaped display panels.

14 Claims, 11 Drawing Figures

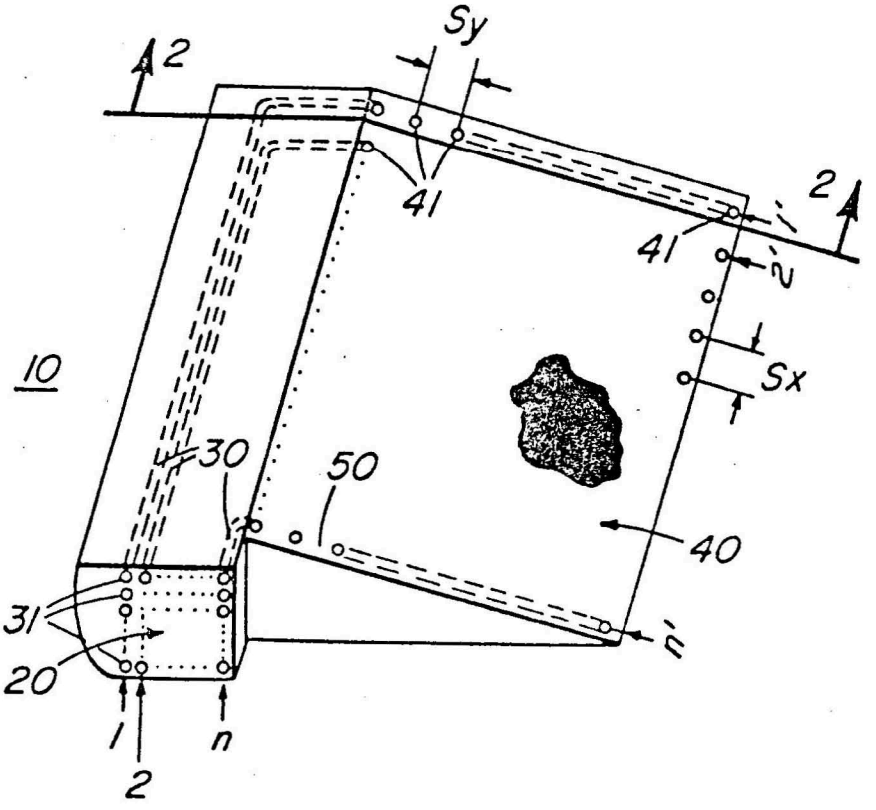

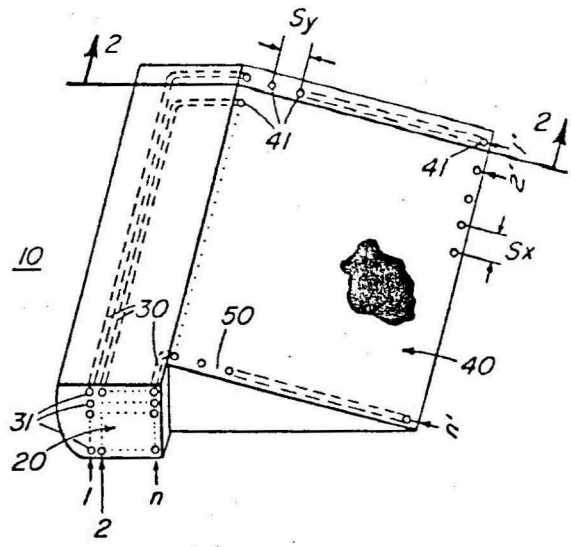

FIG. 1

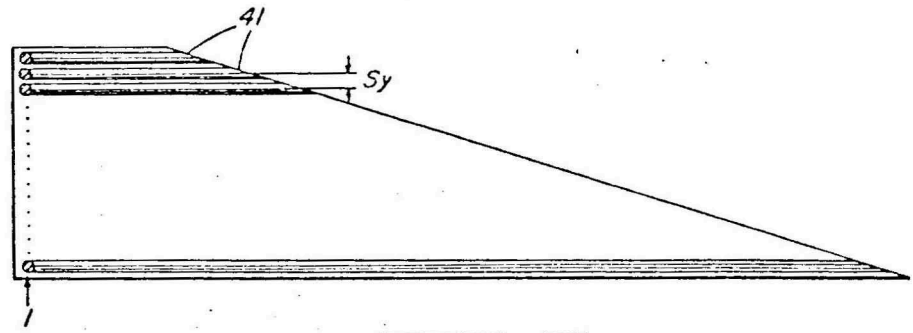

FIG. 2

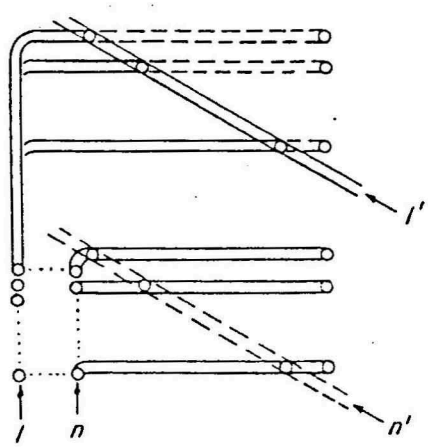

FIG. 3

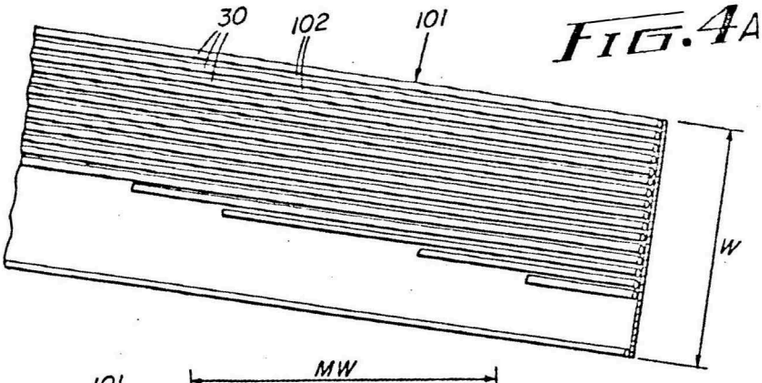

FIG. 4A

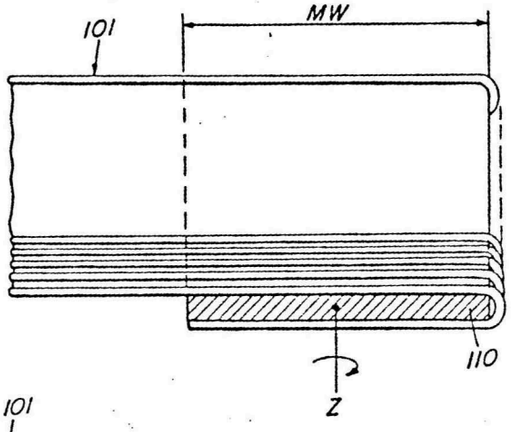

FIG. 4B

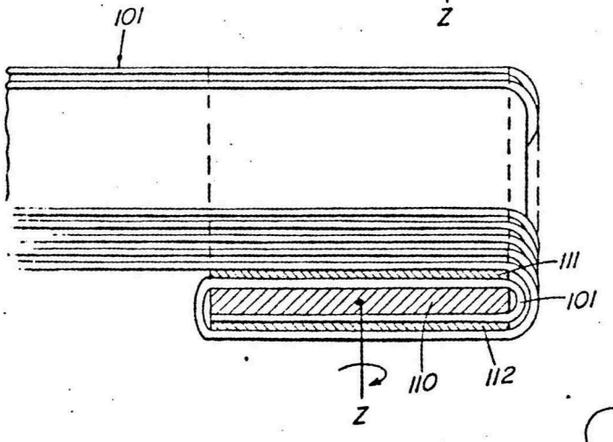

FIG. 4C

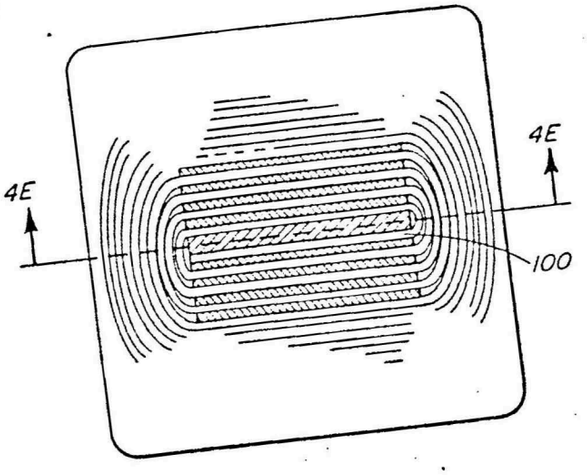

FIG. 4D

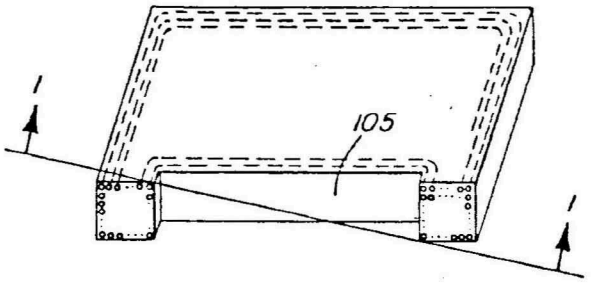

FIG. 4E

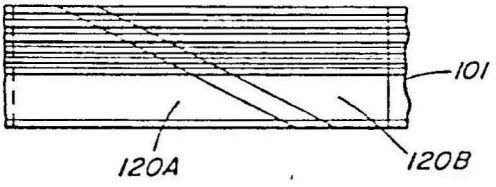

FIG. 5A

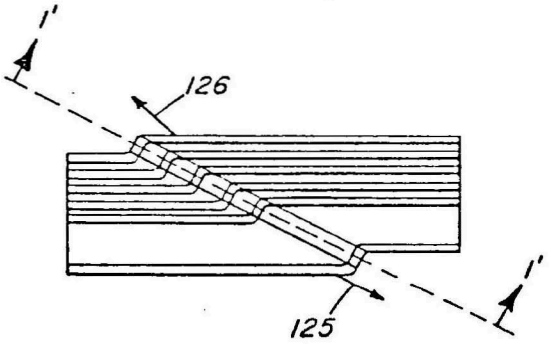

FIG. 5B

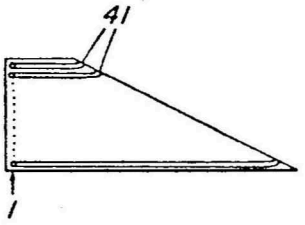

FIG. 5C