Global Prior Art

特許

- *A/D Converters*
- *Connectors*
- *Electronics*
- *Medical Electronics*
- *Semiconductors*
- *Catheters*
- *DSP Circuits*
- *Instrumentation*
- *Process technology*
- *Telecommunications*

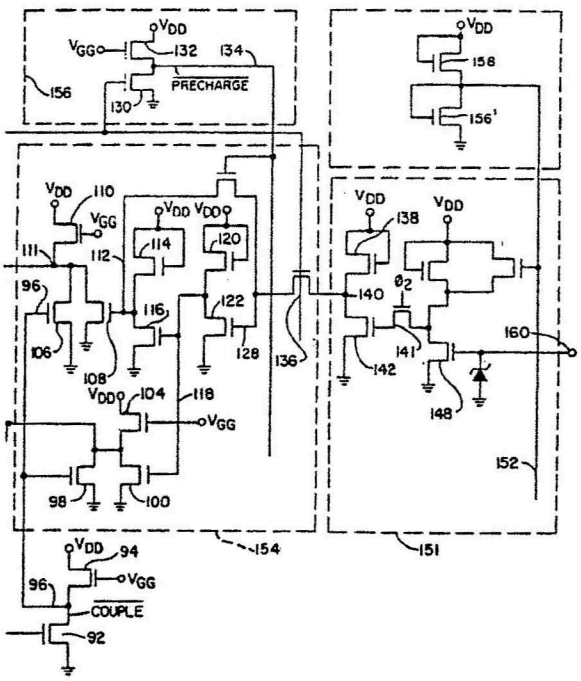

Does it take a rocket scientist to locate the prior art?

It often does!

For more than a decade, clients have relied upon our comprehensive searches to locate critical prior art not identified by traditional database searching. In many cases our "rocket scientists" uncovered critical prior art after others came up empty handed.

GLOBAL PRIOR ART

KOGYO SHIJO KENKYUSHO

One Hundred Summer Street, 27th Floor
Boston, MA 02110
Tel: 617-574-9574 Fax: 617-574-9559
Bruce Rubinger, PhD, Managing Director

GLOBAL PRIOR ART

KOGYO SHIJO KENKYUSHO

One Hundred Summer Street, 27th Floor
Boston, MA 02110
Tel: 617-574-9574 Fax: 617-574-9559
Bruce Rubinger, PhD, Managing Director

CALENDAR OF EVENTS — 1997 — Continued From Page 48

PATENTS, COPYRIGHTS & TRADEMARKS

April 10-11, 1997. TRADEMARKS, COPYRIGHTS, AND UNFAIR COMPETITION FOR THE GENERAL PRACTITIONER. (Washington, D.C.). Sponsored by: American Law Institute-American Bar Association (ALI-ABA). For more information or to register, call 800-CLE-NEWS (253-6397) or 215-243-1630; or access their world wide web site at http://www.ali-aba.org.

April 16, 1997. ANNUAL ADVANCED SEMINAR ON TRADEMARK LAW. (PLI Conference Center, New York, NY). Chair: Baila H. Celedonia. Highlights: Networking luncheon. This is an all new program which keeps you up to date on the latest in trademark law. The focus of this year's one-day program will be on two of the hottest topics in trademark law—the new Federal Dilution Act and right of publicity. The speakers at this advanced seminar will address many of the issues and questions arising out of the new Federal Act and its impact to date. For more information or to register, call 800-260-4PLI; e-mail: info@pli.edu.

April 30 - May 2, 1997. AMERICAN INTELLECTUAL PROPERTY LAW ASSOCIATION SPRING MEETING. (San Antonio Marriott Rivercenter, San Antonio, TX). For more information, call AIPLA at (703) 415-0780.

May 3-7, 1997. INTERNATIONAL TRADEMARK ASSOCIATION ANNUAL MEETING. (Marriott Rivercenter, Marriott Riverwalk and the San Antonio Convention Center, San Antonio, TX). Sponsored by: The International Trademark Association. For more information or to register contact INTA at Phone: 212-768-9887; Fax: 212-768-1234.

June 22-25, 1997. ASSOCIATION OF CORPORATE PATENT COUNSEL. (Ritz-Carlton Aspen, Aspen, CO). For more information or to register, call 16-425-8333.

September 25-27, 1997. PATENT AND TRADEMARK INSTITUTE OF CANADA 71ST ANNUAL GENERAL MEETING. (Sonesta Beach Hotel, Bermuda). Sponsored by: Patent and Trademark Institute of Canada and the Chartered Institute of Patent Agents of London, England. For more information or to register, call 613-234-0516.

September 26-27, 1997. TRIAL OF A PATENT CASE. (Chicago, IL). Sponsored by: American Law Institute-American Bar Association (ALI-ABA). For more information or to register, call 800-CLE-NEWS (253-6397) or 215-243-1630; or access their world wide web site at http://www.ali-aba.org.

TECHNOLOGY TRANSFER

July 20-23, 1997. T2S 1997. ANNUAL MEETING—LEVERAGING TECHNOLOGY FOR COMPETITIVE ADVANTAGE. (Hyatt Regency, Denver, CO). Sponsored by: Technology Transfer Society. Highlights: How is Technology Transfer being utilized as a strategy for competitive advantage for the 21st Century? R&D Budgets are being cut, and corporations must increasingly find avenues for new technology to fit into new product development fast. Come and learn the latest strategies utilizing Technology Transfer in Advanced Materials, Aerospace, Telecommunications, Electronics, Biotechnology and Environmental Technology. For more information or to register, call Dick Chapman at 303-730-2226; or Karl Dakin at 303-799-1992; fax: 303-799-9784.

TELECOMMUNICATIONS LAW

April 24-25, 1997. THE 1997 COMPUTER AND TELECOMMUNICATIONS UPDATE. (ANA Hotel, Washington, D.C.). Sponsored by Computer Law Association. CLA's Annual Update Conference to keep you up to date on recent developments in the merging fields of Computers and Communications Law. For more information contact Barbara Fieser at CLA 703-560-7747; Fax: 703-207-7028; E-mail: clanet@aol.com.

WIPO

April 8-10, 1997. UNESCO-WIPO WORLD FORUM ON THE PROTECTION OF FOLKLORE. (Arcadia Hotel & Resort, Karon Beach, Phuket, Thailand). Organized by the United Nations Educational, Scientific and Cultural Organization (UNESCO) and the World Intellectual Property Organization (WIPO) in cooperation with the Department of Intellectual Property, Ministry of Commerce, Government of Thailand. For more information or to register, call Patrick Masouye of the WIPO at (41 22) 730 94 30; fax (41 22) 734 09 18.

April 28-30, 1997. WIPO WORLD SYMPOSIUM ON BROADCASTING, NEW COMMUNICATION TECHNOLOGIES AND INTELLECTUAL PROPERTY. (Manila Hotel, Manila, Philippines). Organized by the World Intellectual Property Organization (WIPO) in cooperation with the Government of the Philippines and with the assistance of the Kapisanan ng mga Brodkaster ng pilipinas (KBP) (National Association of Broadcasters of the Philippines). For more information or to register, call Patrick Masouye of the WIPO at (41 22) 730 94 30; fax (41 22) 734 09 18.

If you know of an upcoming conference or seminar, send the information to:

Calendar of Events
The LAW Works™
1935 S. Plum Grove Rd. #158
Palatine, IL 60067
or fax to: 847.705.7112.

We will print as many events as space will allow. Please include contact information (date, sponsoring organization, location etc.) and a description of the event.

For more information or to register contact INTA at Phone: 212-768-9887; Fax: 212-768-1234.

June 22-25, 1997. ASSOCIATION OF CORPORATE PATENT COUNSEL. (Ritz-Carlton Aspen, Aspen, CO). For more information or to register, call 16-425-8333.

TELECOMMUNICATIONS LAW

April 24-25, 1997. THE 1997 COMPUTER AND TELECOMMUNICATIONS UPDATE. (ANA Hotel, Washington, D.C.). Sponsored by Computer Law Association. CLA's Annual Update Conference to keep you up to date on recent developments in the merging fields of Computers and

The LAW Works™
1935 S. Plum Grove Rd. #158
Palatine, IL 60067
or fax to: 847.705.7112.

We will print as many events as space will allow. Please include contact information (date, sponsoring organization, location etc.) and a description of the event.

INTELLECTUAL PROPERTY TODAY MARCH, 1997