CONCLUSION

Formal probability assessments are used only during the later stages of an R&D project. In moving through the development process, the simpler steps should be done first. A checklist approach will be appropriate at the idea stage. Later, at the preliminary assessment stage, qualitative scoring model approaches will be called for. A simple cash flow model to estimate the NPV of the project, for example, might be the first quantitative step in evaluating a research and development project. It would come into play no later than the concept stage. Next would come a sensitivity analysis to identify the most crucial variables. Once the variables are identified, it will be useful to structure some simple decision trees using two or three branches at each node to depict management choices, competitor choices and overall probabilities. This will more clearly illustrate the dependencies among the variables and provide a sense of whether the project is clearly acceptable or not. It also will be useful at this point to perform a second sensitivity analysis on the probabilities to see how much precision is required in estimating them. At this point, the probability distributions for the most important variables can be assessed, by a combination of objective, theoretical, and subjective assessments. From this analysis, more complex decision trees can be constructed as needed, and risk simulation can be used, based either on the project's financial model or directly on the decision tree, to generate a risk profile for the project.

Analyses should be performed early in the development stage and repeated at appropriate points throughout development, testing, and trials as more and more information becomes available.

Some summary points deserve to be emphasized in conclusion:

- Information is required to effectively match resources to technology projects; as a project progresses and more resources are needed, the value of information increases. While the emphasis in this booklet has been on analytical tools for R&D project selection, the fundamental point that information is critical needs to be kept at the forefront. As old test pilot put it, "My fundamental job is to ensure that we all are operating from the same set of facts."

- While decision makers must ultimately rely on their own judgment, they should be aware of the analytical tools available to help them determine what information they need and how that information can be organized.

- Some analytical tools are simple and can be used effectively by most people at the beginning stages of the innovation process; other techniques are more complex and costly, requiring special exper-

own judgment, they should be aware of the analytical tools available to help them determine what information they need and how that information can be organized.

- Some analytical tools are simple and can be used effectively by most people at the beginning stages of the innovation process; other techniques are more complex and costly, requiring special exper-

tise and data, and are more appropriate to the later stages of the innovation process.

- No matter what the analytical tools, the input information must be reliable and accurate for the decision to be well made; "garbage in, garbage out" is not the watchword of computer modelers for no reason. In particular, as a project progresses and more and more powerful quantitative analytical tools are brought to bear on the decision process, care is required to avoid infatuation with the quantitative to the neglect of the qualitative factors. Maintenance and updating of some variant of a scoring model throughout development, test, and trials is a healthy discipline.

- Ultimately, as U.S. industry (entrepreneurs, companies, investors, and financial intermediaries) takes maximum advantage of its unparalleled opportunities and resources and makes sound decisions about selecting and developing technologically innovative projects, the U.S. will be able to compete more effectively and maintain its dominant position in world markets.

48

FOOTNOTE

The approaches to research project selection recommended in this booklet are not universally accepted by experienced R&D managers. For example,

> "In recent years formal business planning has stressed the risk weighted, discounted rate of return on R&D projects. The professional literature bulges with methodologies for R&D project evaluation that focus on estimates of potential markets, project costs, and probabilities of success. For slow-growing and protected industries, these methods have been successful. For fast-moving and worldwide industries they have been a disaster. The Japanese and Western entrepreneurs have outflanked and overwhelmed companies relying on such hands-off analytic models."7/

In the authors' judgment, the fault in such arguments is that they pose a specious "judgment versus analysis" dichotomy. They tend to support the idea that R&D evaluation is solely an exercise in intuition. Unfortunately, such rejections of rational approaches are far too common in the current U.S. business environment.

The damage done by purely intuitive approaches to project selection fall into two broad categories. The first can be characterized as "hip shooting." Too many projects have been funded in America and then failed miserably for lack of adequate analyses of the kind described in this booklet. The number has been great enough to contribute to a tangible, although unquantifiable, discrediting of technology innovation in the U.S. 1984 and 1985 capital markets. The authors' plea, therefore, is, "No matter how impatient you may be with formalities, force yourself to go through at least a checklist before throwing money at a proposed R&D project."

The second kind of damage is what we call "conservative paralysis." That is, if a project fails to fit into a familiar and predictable mode, it simply receives no support. There is, of course, an analytical version of "conservative paralysis." Indeed, many of the innovators who (like the author quoted above) reject formal analytical approaches, do so because of wrenching experiences with absolutely unimaginative drones who, to borrow a phrase, "knew the cost of everything and the value of nothing." Calculating an IRR by rote using only "conservative" assumptions at each step <u>is</u> a formula for rejecting innovation. It is <u>sure</u> to

---

7/ Schmitt, R.W., "Successful Corporate R&D," pp. 124 -128, <u>Harvard Business Review</u>, Vol. 63, No. 3, May-June 1985

Calculating an IRR by rote using only "conservative" assumptions at each step <u>is</u> a formula for rejecting innovation. It is <u>sure</u> to

7/ Schmitt, R.W., "Successful Corporate R&D," pp. 124 -128, <u>Harvard Business Review</u>, Vol. 63, No. 3, May-June 1985

cast a bad light on innovation. But, as should be clear from the earlier discussion, such an approach is no more than using numbers to mask a fear of the unknown. The scoring model approach to project selection tends to force these intuitive fears out of hiding into the light where they can be assessed and placed in context.

In summary, the authors recommend an orderly disciplined approach to project selection which incorporates both analysis and judgment. At minimum some sort of checklist approach should be used in R&D project selection. Indeed, this is the most appropriate approach at the very early stages of a project. Moreover, at later stages the authors recommend using a scoring approach -- based largely on intuitive inputs early on, but increasingly based on analysis and research later. At no point, however, should the decision process degenerate into an exercise in numerical calculations; judgment will always be crucial. The discipline of the scoring model approach -- supported by quantitative analysis and probability assessments to a greater or lesser extent depending on whether a large or small investment decision is at issue -- will be valuable in helping entrepreneurs, investors, and financial intermediaries involved in technology innovation to avoid the Scylla of "conservative paralysis" and the Charybdis of "hip shooting."

We firmly believe that a substantial increase in the application of these approaches, even imperfectly, will produce a significant improvement in the employment of our national resources.

50

How To: Write a Winning SBIR Technical Proposal
Thomas H. Frank, Ph.D

1. Respond to the Program Solicitation Only if You Can Win

- Respond in your area of interest
- Personnel capabilities
- Size and duration of the award
- Have a time schedule
- Read a proposal

2. Read the Evaluation Criteria Before You Write

- Limitations: Research, not development
  HHS, DOD, DOE, or NSF
- Quality of the research plan
- Adequacy of the objectives
- Qualifications of the Principal Investigator and availability of facilities
- Importance of the proposed research

3. Plan and Write the Phase I Proposed Contents

- Outline the research plan first
WHAT you are going to do and HOW you are going to do it
- Respond to all items
- Use the format provided

4. Obtain Your Own Independent Proposal Review

- University or other small business consultant
- Review, rewrite, and edit the draft

5. The Proposal Is Due On Time

- Review time
- Typing and reproduction
- Delivery

THOMAS H. FRANK, Ph.D
Perinatronics Medical
Systems, Inc.
1488 Jordan Avenue
Crofton, Maryland 21114

Perinatronics Medical
Systems, Inc.
1488 Jordan Avenue
Crofton, Maryland 21114

COMMON PROPOSAL PROBLEMS

The following are common problems that government agencies find in unsuccessful R&D proposals. They are briefly described here to be of assistance, particularly to those firms which have not been successful in obtaining R&D awards.

• Low Quality Proposals - When reviewers of R&D proposals to government see many proposals from universities, large business and small firms, it becomes apparent that far too many proposals from small business are of poor quality, many unnecessarily so if the small firm were aware of what constitutes a high quality proposal. However, a substantial number of small firms do submit high quality successful proposals so it is not a matter of size or type of organization. Instead it requires a thorough knowledge of the R&D subject, of other research directly relevant to the topic, and a carefully done, well organized and well written proposal. Its length should relate to the amount of funding requested. In general, larger funding requests require more written justification than smaller requests.

The purpose of research proposals is to provide a comprehensive statement that contains sufficient information to persuade those who review and fund the proposal that the proposed work represents a sound approach to the investigation of an important scientific or engineering question. The proposal must be technically worthy of support under the stated criteria. It should be self contained and written with the care and thoroughness accorded papers for journal publication. Each proposal should be reviewed carefully by the applicant and by others highly knowledgeable on the subject to ensure the inclusion of data essential for evaluation. The principal investigator (project manager) must demonstrate his or her knowledge of other R&D in the field, and that the proposed work does not duplicate R&D that may already have been done. A convincing bibiography of directly relevant literature and your familiarity with it can be woven into the proposal.

• Proposal Balance - Many proposals from small business contain much irrelevant material. All information should be directly relevant to the proposed work. Brochures, general information on the company, self-serving puffery should be avoided. Only those curriculum vitae of the key persons working on the project are desired. The majority of the proposal by far should be on a detailed discussion of the problem, the proposal's objectives, the research or work plan (how you will do the work in detail), the technical problems anticipated during the work and how you will handle them, discussions of directly related R&D by you and others both inside and outside your firm, and of the qualifications of key personnel to carry out the work. You must demonstrate a solid knowledge of the problem and your approach to it.

• Not Following Instructions - Surprisingly a large number of small businesses in particular do not follow the detailed instructions contained in an RFP, program solicitation or other guidelines. Proposers who do not

the research or work plan (how you will do the work in detail), the technical problems anticipated during the work and how you will handle them, discussions of directly related R&D by you and others both inside and outside your firm, and of the qualifications of key personnel to carry out the work. You must demonstrate a solid knowledge of the problem and your approach to it.

• Not Following Instructions - Surprisingly a large number of small businesses in particular do not follow the detailed instructions contained in an RFP, program solicitation or other guidelines. Proposers who do not

MANAGING TECHNOLOGY IN A GOVERNMENT-OPERATED LABORATORY

G TECHNOLOGY IN A -OPERATED LABORATORY

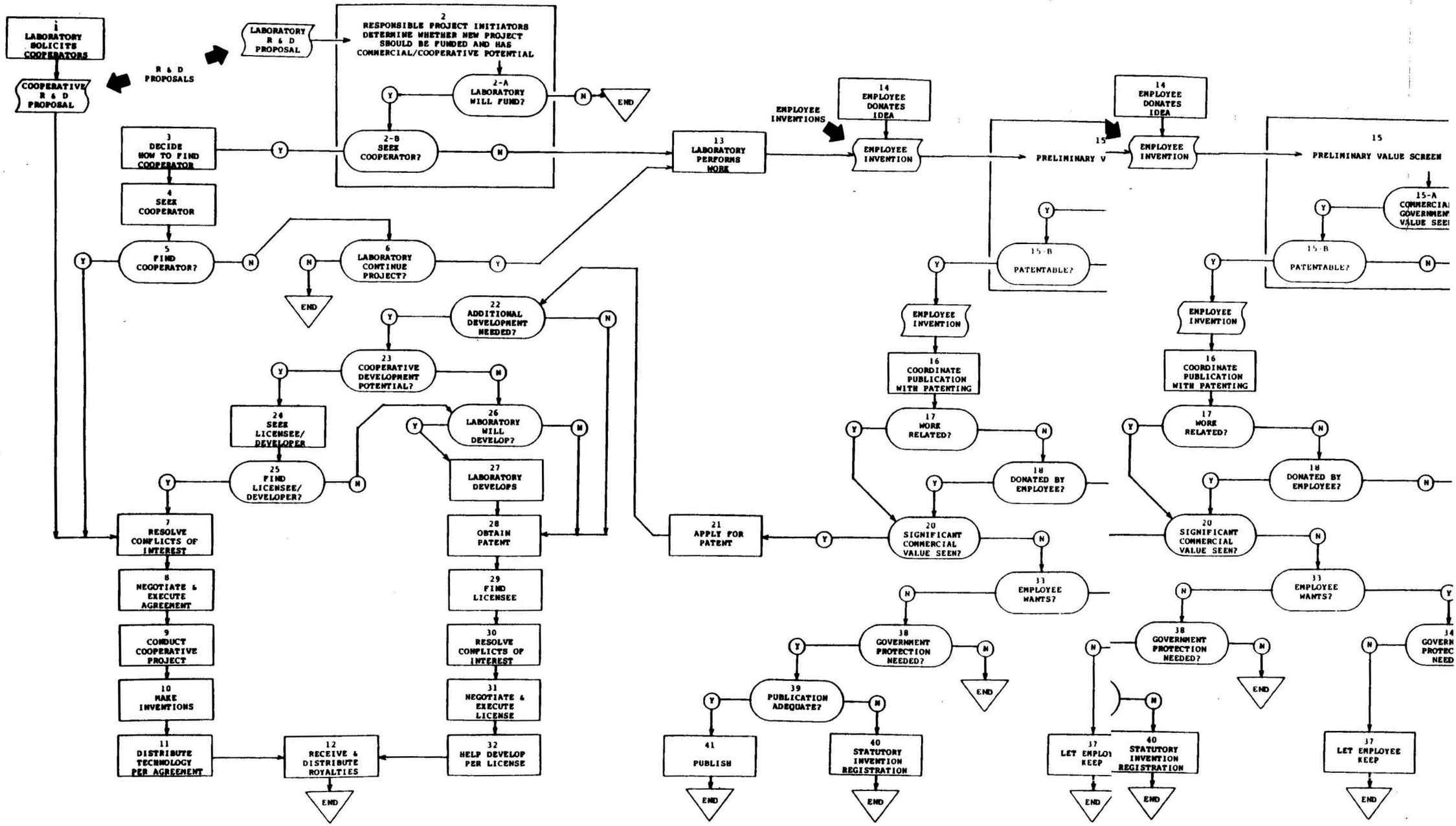

MANAGING TECHNOLOGY IN A GOVERNMENT-OPERATED LABORATORY

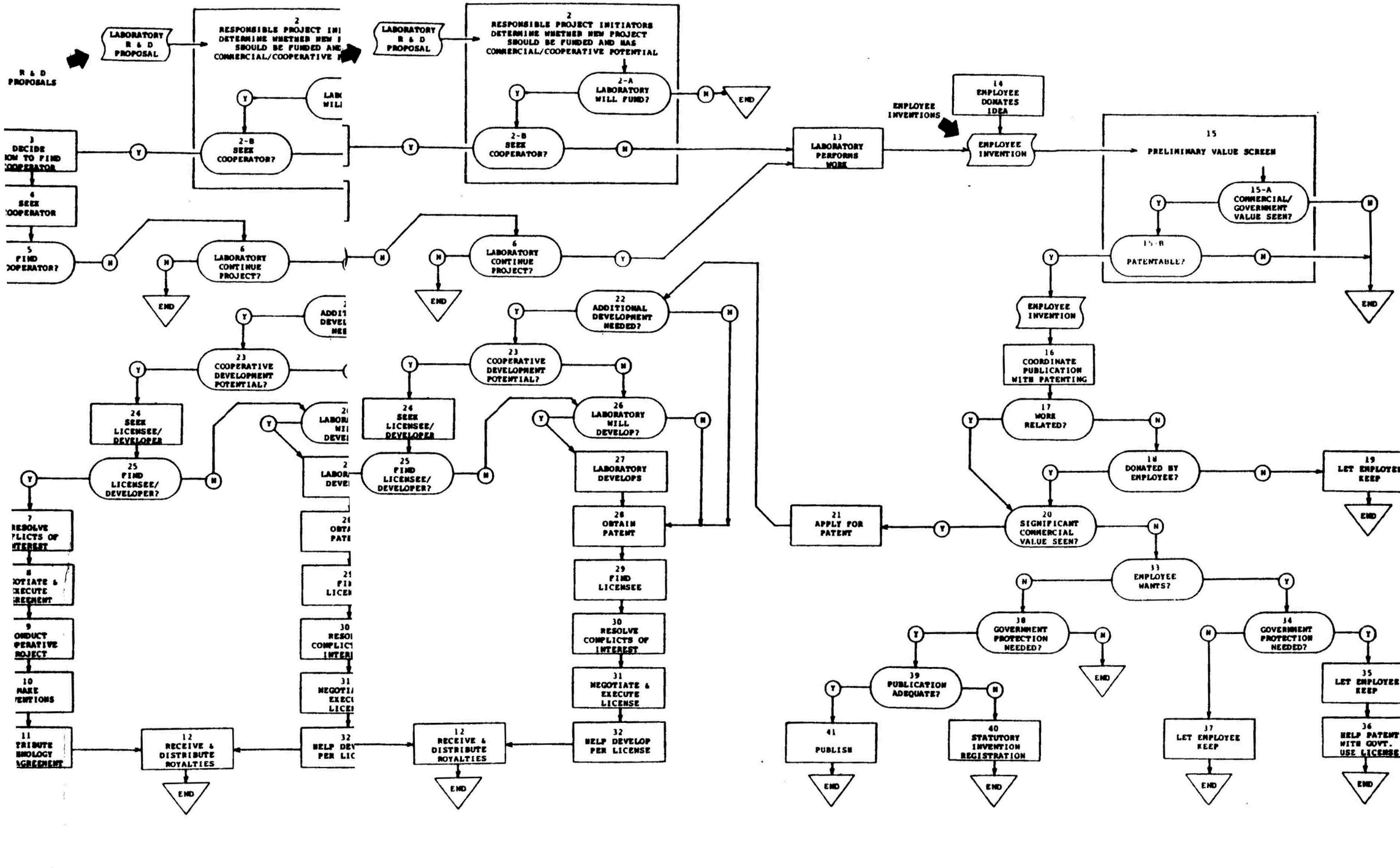

PROPOSED SYSTEM FOR MANAGING TECHNOLOGY IN FEDERAL LABORATORIES

PART 1

Part 1a.

While there are many forms of technology transfer, the schematic chart titled, "Managing Technology in a Government-Operated Laboratory," concentrates on the two identified in Section 11 of the Federal Technology Transfer Act of 1986--collaboration with other organizations and management of patentable inventions by Government-operated laboratories. The proposed system of actions and decisions has been developed as a basis for discussion. This determination will establish a "laboratory" within the meaning of the Technology Transfer Act of 1986.

The schematic is a generalized presentation that considers domestic patents only, applies to unclassified work only, and omits some details. The system emphasizes laboratory/industry cooperation and patent licensing because of the new Section 11 authorities. It is not intended to substantially impact on the wide range of other typical laboratory interactions such as publication of papers, consultation, and personnel exchanges.

Each rectangle in the chart represents a work step or series of actions, while each oval indicates a decision step. While the chart does not indicate who should make each decision, we believe that by identifying and describing them, we will recognize the need to designate who should contribute and who should have the authority to make each decision. Regardless of who makes a decision, the chart assumes the necessary close cooperation among:

- Laboratory researchers and scientists
- Research managers
- Technology transfer officers
- Attorneys (including Patent Attorneys)

The chart has three points of entry. The first follows Step 1 when a proposal for a cooperative R&D project is received from outside the laboratory. The second is Step 2 when an internal proposal for a laboratory project is being initiated. The third is Step 15 PRELIMINARY VALUE SCREEN, where when the laboratory makes a preliminary decision on whether an employee's discovery or idea may be a valuable and patentable invention.

The chart has ten triangles that say "end." This means the end of what the chart is intended to show -- not the end of activity for the laboratory, an employee, the technology transfer officer, or a patent attorney.

makes a preliminary decision on whether an employee's discovery or idea may be a valuable and patentable invention.

The chart has ten triangles that say "end." This means the end of what the chart is intended to show -- not the end of activity for the laboratory, an employee, the technology transfer officer, or a patent attorney.

Part 1b. Step-by-Step Explanation

Step 1, LABORATORY SOLICITS COOPERATORS. A laboratory may encourage outside proposals for cooperative R&D projects. The chart shows R&D proposals being received in response to this encouragement but omits the obvious evaluation and decision steps that would preceed a cooperative project.

(Part 2a, Techniques for Finding R&D Cooperators and Licensees discusses ways to publicize a laboratory's interest in undertaking cooperative R&D projects; page 10.)

Step 2, PROJECT INITIATION--CONSIDER MEANS OF COMMUNICATING AND TRANSFERRING RESULTS. This is the first large rectangle. When a new R&D project is being considered, it is normal to think about how the results of a project will be communicated to the sponsor as well as deciding whether or not the project should be funded. With the new authorities, labs should also ask at this stage whether the project may have commercial potential and whether a private sector organization might be interested in helping or cooperating on the project. A related question is whether the project can be modified to meet the original sponsor's needs and increase its interest for a private sector organization. The chart compresses these considerations into two decisions. Step 2-A, LABORATORY WILL FUND? YES leads to Step 2-B, SEEK COOPERATOR? If 2-B is YES, the laboratory will seek a cooperator. If NO, the laboratory will proceed to do the work on its own.

Taking advantage of the commercial potential and possibility of R&D cooperation at an early stage may have several benefits for the laboratory, including:

- The sooner a commercializing firm becomes involved in developing a technology, the greater the chances of commercial success.
- The private sector may supplement Federal funds for conducting laboratory R&D.
- Other parties may bring knowledge and expertise to the project that increase its chances of meeting the Government sponsor's needs.
- Working with outsiders can enrichen the job of laboratory staff in many ways.

If the R&D project is expected to lead to an item the Government will purchase, there may be an opportunity to expand the market for the item. This can spread both the development and manufacturing costs among private as well as Government users, thus lowering the total cost to the Government.

- Working with outsiders can enrichen the job of laboratory staff in many ways.

If the R&D project is expected to lead to an item the Government will purchase, there may be an opportunity to expand the market for the item. This can spread both the development and manufacturing costs among private as well as Government users, thus lowering the total cost to the Government.

Step 3, DECIDE HOW TO FIND COOPERATOR. If the project appears to have commercial potential and may be of interest to a cooperator, the next step is to decide how to find one.

> (Part 2b. Techniques for Finding R&D Cooperators and Licensees discusses some ways this can be done; page 10.)

Step 4, SEEK COOPERATOR. This involves carrying out the plan for finding a cooperator.

Step 5, FIND COOPERATOR? NO. (If YES, go to Step 7)

Step 6, LABORATORY CONTINUE THE PROJECT? The decision at Step 2-B to proceed may have been conditioned on finding a cooperator. If none is found, the laboratory will have to decide whether or not to proceed on its own.

Step 7, RESOLVE CONFLICTS OF INTEREST. If a cooperator is found, before an agreement is executed, it is necessary to ensure that conditions which might lead to an apparent or real conflict of interest are identified and provided for.

> (Part 2a. Conflict of Interest discusses a number of aspects of conflict of interest, including situations where the term is sometimes missused; page 16.)

Step 8, NEGOTIATE AND EXECUTE AGREEMENT. Under the Federal Technology Transfer Act, cooperative R&D agreements are not procurement contracts, grants, or cooperative agreements as these instruments have been established by the Federal Grant and Cooperative Agreement Act. As a result, neither the Federal Acquisition Regulation nor Government-wide assistance policies apply. This gives labs wide latitude to negotiate terms and conditions with cooperators that meet the needs of the particular parties. Model agreements are being developed as a point of departure to assist labs in developing the agreements they may need.

A prime objective of some cooperative R&D projects may be to produce inventions that can lead to marketable products. In other cases, inventions may be a possible outcome but not an objective or perhaps not even likely. Since it is often impossible to anticipate when an invention will occur, it is best to assume that any R&D project has a chance of producing one, and the rights to a resulting invention should be established in the agreement.

Step 9, CONDUCT COOPERATIVE PROJECT.

> (Part 2b. Types of R&D Cooperation suggests different types of shared projects that labs may find beneficial;page 12.)

impossible to anticipate when an invention will occur, it is best to assume that any R&D project has a chance of producing one, and the rights to a resulting invention should be established in the agreement.

Step 9, CONDUCT COOPERATIVE PROJECT.

> (Part 2b. Types of R&D Cooperation suggests different types of shared projects that labs may find beneficial;page 12.)

Step 10, MAKE INVENTIONS. An oversimplification that includes all of the steps necessary to identify, describe, and protect an invention.

Step 11, TRANSFER TECHNOLOGY PER AGREEMENT. This alludes to the time that responsibilities and rights are undertaken by the original sponsor, the cooperating partner, the lab, and individual investigators in accordance with the agreement in order to initiate commercializing the results of the research. It includes project reports, rights to publish, demonstration models, and patent rights if any.

Step 12, RECEIVE AND DISTRIBUTE ROYALTIES. Agencies must follow the statutory requirements and select among the options for using royalties the Government receives from licensed or assigned inventions.

Step 13, LABORATORY PERFORMS WORK. Going back to Step 2, if a project is not seen as having cooperative R&D potential, or the lab was unable to find a cooperator (Step 6), the lab will consider the merits of the proposal and decide whether or not to do the work on its own just as it has always done. If it goes ahead, a lab employee may report a discovery or an idea that could be an invention.

Step 14, EMPLOYEE DONATES IDEA. Under the new law, a Government employee may voluntarily assign an invention that may be entirely unrelated to his or her job. This is to give employees an opportunity to have their ideas evaluated, patented, and managed by a laboratory if the lab agrees. It also provides an additional source of ideas to laboratories and the Government which might otherwise die for lack of follow-up.

Step 15, PRELIMINARY VALUE SCREEN. Based on experience most employee ideas will not have significant potential. This two-part evaluation step is designed to be a quick and low-cost process for sorting those which may have significant value from those which have little promise. The first question (Step 15-A, COMMERCIAL/GOVERNMENT VALUE SEEN?) involves technological, economic, and managerial questions. The Government may anticipate using the idea and need for defensive protection even if there does not appear to be any commercial potential. If there is reason to believe the idea or discovery may be of commercial value or of use to the Government, the second part (Step 15-B, PATENTIBLE?) should be performed by a patent attorney to provide advice on what type of patent protection may be obtainable. If this Preliminary Value Screen indicates the idea may have commercial potential or value to the Government and be patentable, the employee is considered to have made an invention.

obtainable. If this Preliminary Value Screen indicates the idea may have commercial potential or value to the Government and be patentable, the employee is considered to have made an invention.

4

This step will involve the employee, the technology transfer officer, the person designated by the laboratory for conducting the screening process, individuals who may be members of a screening committee, a patent attorney, and perhaps others. Considerable thought should go into how a laboratory will organize and conduct this step which should include the content and flow of invention reports, confidentiality agreements, and controls.

(Part 2c. Determining the Value of a Technology outlines factors and approaches to evaluating technology; page 14.)

Step 16, COORDINATE PUBLICATION WITH PATENTING. It may be desirable to publish a paper on the discovery or idea. Publication is entirely consistent with patenting, but done prematurely, publication can destroy the opportunity to obtain a patent. In addition, "publication" has a special meaning in patent law. The inventor should be advised on how to coordinate the timing of discussions of the technology and publications with domestic and perhaps foreign patent applications.

Step 17, WORK RELATED? Executive Order 10096 sets the policies and the rights of the Government and its employees to employee inventions. A test is whether the invention was work related or made in the course of regular assigned duties. If YES, the invention should be examined more extensively for possible commercial value.

Step 18, DONATED BY EMPLOYEE? NO. (If YES, go to Step 20)

Step 19, LET EMPLOYEE KEEP. If the invention was not work related, and not donated by the employee, and the Government has no interest in it, the employee should normally be allowed to keep it.

Step 20, SIGNIFICANT COMMERCIAL VALUE SEEN? YES. If the invention is work related or has been donated by the employee and it has passed the Preliminary Value Screen, its commercial potential should be evaluated more extensively. Although a small step on the chart, determining commercial value can be a complex process. (If NO, go to Step 33.)

(See Part 2c, "Determining the Value of a Technology"; page 14.)

Step 21, APPLY FOR PATENT. The laboratory should apply for a patent on an idea or discovery of an employee to which the Government has rights, that appears to be patentable, and that appears to have significant commercial value. While the Government has obtained thousands of patents, few of them were obtained primarily for commercial use. The laboratory needs to ensure that the application is designed to produce a strong and licensable patent.

page 14.)

Step 21, APPLY FOR PATENT. The laboratory should apply for a patent on an idea or discovery of an employee to which the Government has rights, that appears to be patentable, and that appears to have significant commercial value. While the Government has obtained thousands of patents, few of them were obtained primarily for commercial use. The laboratory needs to ensure that the application is designed to produce a strong and licensable patent.

Step 22, ADDITIONAL DEVELOPMENT NEEDED? YES. The idea may need additional development, either to meet Government needs or to make it more attractive for promotion and licensing.

Step 23, COOPERATIVE DEVELOPMENT POTENTIAL? YES.

Step 24, SEEK LICENSEE/DEVELOPER. To be done if it appears that a cooperator might be found to help develop the invention.

(See Part 2a. Techniques for Finding R&D Cooperators and Licensees; page 10.)

Step 25, FIND LICENSEE/DEVELOPER? YES. If a licensee/developer is found, the logic of the chart flows back to Step 7 for creating a cooperative R&D project.

Step 26, LABORATORY WILL DEVELOP? YES. If the invention does not appear likely to interest a cooperator, or if one cannot be found, the lab must decide whether to continue development on its own, and continue seeking patent protection and licensees.

Step 27, LABORATORY DEVELOPS.

Step 28, OBTAIN PATENT. Regardless of whether or not the lab continues development, if the idea still appears to have commercial potential, the lab will continue to pursue a patent.

Step 29, FIND LICENSEE.

(See Part 2a. Techniques for Finding R&D Cooperators and Licensees; page 10.)

Step 30, RESOLVE CONFLICTS OF INTEREST. The degree of involvement that a laboratory employee inventor may have in the follow-on development and commercialization of an invention must be decided. This should be considered before the laboratory enters into negotiations with a potential licensee, recognizing that the licensee's wishes must also be considered.

(See Part 2d. Conflicts of Interest; page 16.)

Step 31, NEGOTIATE AND EXECUTE LICENSE. Under the new law, laboratories may be delegated authority to negotiate their own licenses. Once the lab has decided to seek a patent, it should start looking for a licensee. If one is found before the patent is issued, the licensee may wish to amend and the strengthen the patent application in relation to a specific product.

Step 32, HELP DEVELOP PER LICENSE. Extensive development is usually required to convert an invention into a marketable product, and often the inventor or the originating lab can make unique contributions. The new law allows laboratories to include

laboratories may be delegated authority to negotiate their own licenses. Once the lab has decided to seek a patent, it should start looking for a licensee. If one is found before the patent is issued, the licensee may wish to amend and the strengthen the patent application in relation to a specific product.

Step 32, HELP DEVELOP PER LICENSE. Extensive development is usually required to convert an invention into a marketable product, and often the inventor or the originating lab can make unique contributions. The new law allows laboratories to include

in their licenses, provisions for the laboratory or the inventor to contribute to further development and commercialization of the invention. Although not shown on the chart, the license might actually be a cooperative R&D agreement which could lead to additional, follow-on inventions. In this case, the logic flow would be from Step 32 back to the cooperative agreement activities beginning at Step 7.

Step 33, EMPLOYEE WANTS? YES. The new law says that an employee will be allowed to keep his or her invention that the Government has a right to own, but has decided not to patent or commercialize. Since the employee may believe the invention has more value than the Government recognizes, this serves as a backstop to prevent destroying the invention's commercial value.

Step 34, GOVERNMENT PROTECTION NEEDED? YES. In the past, the Government obtained most of its patents to protect its royalty-free right to use inventions it had funded. The Government will continue to need this protection for many inventions regardless of their commercial value.

Step 35, LET EMPLOYEE KEEP. The employee should be allowed to keep the invention on the condition that the Government will retain a royalty free right of use.

Step 36, HELP PATENT WITH GOVT. USE LICENSE. Had the employee not wanted the invention, and had the Government decided to file a Statutory Invention Disclosure, (see Step 40) the Government would have incurred filing and attorney costs. Thus, it is equitable for the lab to help the employee obtain a patent where the Government retains a royalty-free use license. The help could include actual filing of the patent for the employee or paying a fair share of the costs.

Step 37, LET THE EMPLOYEE KEEP. If the Government sees no use of its own to protect, the employee should be allowed to keep the invention without giving the Government a license.

Step 38, GOVERNMENT PROTECTION NEEDED? YES. If the employee does not want an invention that the Govenment does not intend to patent, then the Government should decide whether it needs to protect its royalty-free right of use. This is the same decision as Step 34, but the actions taken are different.

Step 39, PUBLICATION ADEQUATE? YES. Once an idea or discovery has been published, statutory bars to patenting take effect. After prescribed periods, the bars prevent anyone from obtaining a patent, and the idea or discovery can be used freely. Thus, publication may provide the use protection the Government needs, and where adequate, publication is also the cheapest form of protection.

as Step 34, but the actions taken are different.

Step 39, PUBLICATION ADEQUATE? YES. Once an idea or discovery has been published, statutory bars to patenting take effect. After prescribed periods, the bars prevent anyone from obtaining a patent, and the idea or discovery can be used freely. Thus, publication may provide the use protection the Government needs, and where adequate, publication is also the cheapest form of protection.

Step 40, STATUTORY INVENTION REGISTRATION. P.L. 98-622 allows an inventor or the Government to register an invention with the Patent Office without obtaining a regular patent. By this process (called a SIR), the invention is put into the public domain for anyone to use freely. It serves the Government's purpose of protecting the right of free use. It takes effect sooner than a publication, which may be important for rapidly moving fields of technology. A SIR costs less than a patent but is more than a simple publication.

Step 41, PUBLISH.

8

PART 2

Part 2a. Techniques for Finding R&D Cooperators and Licensees

Close cooperation between a Federal laboratory and a commercial firm is new to the culture of most Government employees and managers. Laboratories have legitimate concerns that relationships with the private sector both be fair and appear fair. An attribute of the industrial culture, however, is to maintain secrecy around actions that may affect future products. To be effective it is clear that cooperative R&D agreements and patent licenses must bridge the two cultures. The way a laboratory decides whom to accept as a cooperating party is important to both the appearance and actuality of fairness. This is particularly true where the industry partner will obtain a degree of exclusivity in the results. Labortories will have to exercise some ingenuity in meeting this test. The following are suggestions on how that might be done.

A. If the cooperation stems from an existing laboratory invention, the primary methods to ensure fairness are:

(1) Advertising the invention as available for licensing through NTIS publications, agency fliers, and industry contacts, or use of intermediaries, and other dissemination techniques that expose the invention to possible licensees.

(2) The Federal patent licensing regulation (37 C.F.R. Ch. IV based on 35 U.S.C.208), establishes a process for determining the best potential licensee for a Government-owned invention and includes a Federal Register publication requirement for exclusive and partially exclusive licenses. While cumbersome and at times, resulting in disputes that end in less than desirable results, the regulation provides for a selection process that is perceived as fair.

(3) Use of a technology management intermediary (such as NTIS, Reseach Corporation, or for-profit technology brokers) to approach industry for the laboratory. In general, these services work best for inventions that have an obvious market value and require relatively little additional development.

B. If the laboratory tries to find a collaborator to help conduct research or develop a technology for which no property rights have yet been established, there are several factors and approaches to consider.

development.

B. If the laboratory tries to find a collaborator to help conduct research or develop a technology for which no property rights have yet been established, there are several factors and approaches to consider.

(1) While procurement rules do not apply to cooperative R&D agreements, the feeling of need for an open process comes from the requirement for competitive procurements. There is, however, provision for sole source procurement of R&D that involves unique ideas and when it makes sense to deal directly with those who have the ideas. This view might guide entering into cooperative R&D agreements but labs should be sure to have recorded justifications of their actions.

(2) A lab could publish notices that it is seeking a cooperating party or use intermediaries to do this. It could use the Federal Register as a formality, but scientific, professional, and trade journals and associations would probably be more effective.

(3) Depending on the structure of the industry, the lab could contact the firms it believes most likely to be interested and negotiate with those that respond.

(4) The lab could organize the project in conjunction with a university or unit of State or local government as a partner or intermediary. Allowing the partner or intermediary to select the company or companies could remove the choice from the laboratory. This may be useful where lower levels of government or universities are more able to establish relationships with industry that are closer than arms-length. The partner or intermediary may not, however, be able or willing to evaluate the technical capabilities of a potential R&D cooperator, however.

C. Handling cases where a firm approaches the laboratory with a request to collaborate in research or in developing a technology on which the Government holds no patents, can be divided into two time periods.

- Requests received before the lab makes a general announcement of its willingness to enter into cooperative R&D agreements, and

- Requests received after the lab has made an announcement.

(1) It appears that a laboratory can announce its willingness to consider cooperative R&D agreement proposals in fields of science or technology, to be acted on at the lab's convenience. The announcement can provide for a first-come, first-considered selection process, or one that accumulates proposals for a while and then picks the most desirable. The announcement could offer confidentiality for the proposals and present the general agreement terms the lab would offer and require. Once a lab makes this sort of announcement, and follows a rational selection process,

(1) It appears that a laboratory can announce its willingness to consider cooperative R&D agreement proposals in fields of science or technology, to be acted on at the lab's convenience. The announcement can provide for a first-come, first-considered selection process, or one that accumulates proposals for a while and then picks the most desirable. The announcement could offer confidentiality for the proposals and present the general agreement terms the lab would offer and require. Once a lab makes this sort of announcement, and follows a rational selection process,

it would probably have met the requirements for both actual and apparent fairness. With the general announcement made in advance, no additional publication should be needed for a specific agreement.

(2) The problem may be greater if a proposal is received that leads to a cooperative R&D agreement before an announcement is made. This may be primarily a start-up problem, but it could occur any time a firm offers a proposal in a field not covered by a lab's announcement. It would be good if the company would agree to a public notice of the proposed agreement. But possibilities of delays, actions by competitors, and publicity may lead a company to reject the idea. Many labs have service for others programs that make lab facilities available to companies for proprietary work. The policies on deciding who can participate in these programs may be a useful and realistic precedent. It may also be possible to work though a university or local government intermediary to remove the selection onus from the laboratory. Finally, the view discussed above (2(a)), that R&D aggreements don't fit the normal openness mold of procurement might be applied.

Part 2b. Types of R&D Cooperation

The range of different types of cooperative R&D projects, in order of increasing complexity includes the following.

A. Parallel Efforts. Probably the simplest type of cooperative R&D project that a laboratory may undertake would consist of parallel but separate work by the lab and the cooperator, with agreement to exchange results. This would not involve joint or shared management, mingling of resources, or the likelihood of inventions made jointly by laboratory employees and non-Federal co-inventors. Since the cooperator would not be a party to the work done by the lab, there would be no provision under existing law to restrict public access to the results produced by the lab. If restricted access is important to some aspects of the project, such as creation of computer software that the non-Federal party desires to Copyright, the work should be divided so that the non-Federal party develops and controls those aspects.

B. Facilities Sharing. Either party might agree to provide the use of equipment or facilities to a joint project. For example, either party might provide an environment to test equipment developed by the other party under the agreement. Under such agreements, there would be minimal mingling of resources, but there may need to be provisions covering damage to and disposition of the shared facilities and the equipment being tested.

Federal party develops and controls those aspects.

B. Facilities Sharing. Either party might agree to provide the use of equipment or facilities to a joint project. For example, either party might provide an environment to test equipment developed by the other party under the agreement. Under such agreements, there would be minimal mingling of resources, but there may need to be provisions covering damage to and disposition of the shared facilities and the equipment being tested.

C. Personnel Sharing. Next on the complexity scale, would be where either the laboratory or the cooperator would provide the services of personnel to pursue an agreed program of work, perhaps at the other's site. This could occur under a patent license where the lab agrees to allow the inventor to assist the licensee with advice or other types of assistance in transforming the invention into a product. Or, it could result from a company requesting the opportunity for one or more of its employees to assist a particular Federal laboratory employee in the conduct of a particular line of work. Under these situations, there would be little or no mingling of resources other than personnel time, but co-inventions involving the non-Federal employees might be a distinct possibility.

D. Industry Funding. A firm might be willing supplement the funding of work undertaken by the laboratory. In their simpler forms, these agreements would include an explicit and predetermined statement of work that is not likely to change, so there would be minimal sharing of decision-making responsibility. Industry funding agreements may require provisions listing the types of laboratory costs that will be allowable and how the costs will be reported. In laboratories whose accounting systems are slow to report, special records may have to be kept to track the use of non-Federal funds.

E. Shared Management. Probably the most complex type of cooperative R&D arrangement would involve a project with significant unknowns and where it is necessary to provide for mutual sharing of the project direction responsibilities. The agreements for these projects need to provide for the management and decision making process. Perhaps the best approach to developing such a project is for the lab and cooperator to work out in technical terms, the initial direction of work, the preliminary decision points, the possible alternatives that may be followed as a result of the decisions, and other significant anticipated or possible events. The formal agreement for the project would then be drafted after the strategy for conducting the project has been outlined.

Part 2c. Determining the Value of a Technology

This paper will not attempt to replicate the many books and articles in print and being written about evaluating technologies, but there are some points of particular relevance to Federal laboratories.

A. Basis for a Technology's Value. For our purposes, technology is knowledge resulting from R&D, of how to achieve a desired physical result. The value of the technology is basically the value of the result minus the cost of achieving the result.

This paper will not attempt to replicate the many books and articles in print and being written about evaluating technologies, but there are some points of particular relevance to Federal laboratories.

A. Basis for a Technology's Value. For our purposes, technology is knowledge resulting from R&D, of how to achieve a desired physical result. The value of the technology is basically the value of the result minus the cost of achieving the result.

Sometimes, the value of a technology is directly related to the number of people or firms who have access to it and can use it. To achieve its greatest value, such technology should be put into the public domain through publications, meetings, etc., and distributed through technology dissemination programs, consultants such as Agricultural Extension Agents, and education programs.

At the other extreme, the value of a technology may be inversely related to the number of people or firms that have access to it and can use it. This is often the case with an invention, where a significant capital investment is needed to bring the invention to market by the first firm to use it, but where other firms if allowed, might bring similar or improved products to market without having to repeat the investment. In this situation it is important to protect the first firm's capital investment by restricting other firms' ability to copy. Simply put, this is what a patent does.

Perhaps the clearest example is a potential therapeutic product, where millions of dollars must be spent by the developing firm on testing and obtaining pre-market approvals. A firm making a direct copy would be spared much of this investment, would have lower costs to recover, and could sell at a lower cost. Without confidence that copying would be restricted, no firm would make the initial investment, and the therapeutic would not come to market. Thus if anyone were allowed to use the technology necessary to make the therapeutic, the therapeutic would never be made and its practical value to the public and the economy would be zero.

A body of technology might include elements with both types of value. This could occur, for example in a field of measurement, where an part of the technology consists of data that should be widely publicized. Another part of the technology might be needed to make special measurement equipment and would require a significant developmental investment before the equipment becomes available to those who need to make the actual measurements.

Finally, the value of a technology may stem primarily from its usefulness to the Government. In such cases, the Government may need to protect its right to use the technology it created without having to pay royalties to others who may claim it as their invention. In the past, most Government patents were obtained to gain this protection.

Step 2 on the system chart requires a prediction of the value of the technology that a new project is most likely to produce. Step 15 requires a preliminary evaluation of a discovery or idea. In both steps, the distinctions just described must be applied to each particular case.

Step 2 on the system chart requires a prediction of the value of the technology that a new project is most likely to produce. Step 15 requires a preliminary evaluation of a discovery or idea. In both steps, the distinctions just described must be applied to each particular case.

13

B. Intellectual Property. The way to protect the rights of one party to use a technology while controlling the opportunity for others to use it is through identifying and protecting the technology as intellectual property. Normally this is done today to protect an investment in developing the technology and bringing it to market. It is done primarily through:

- o Patents,
- o Copyrights, and
- o Technical data kept in confidence.

Conversely, the way to ensure that anyone including the Government can use a technology is to destroy any intellectual property value it might have by putting it in the public domain through publication or some other means. Unfortunately, it is easy to accidentially destroy the intellectual property value of a technology that should be protected. In part, Steps 2 and 15 should lead to a deliberate decision on protection, publication, or a combination of the two.

C. Commodities vs. Differentiated Products The goods traded by the world's economies tend to be either commodities or differentiated products. The markets for commodities (e.g. iron, wheat, and oil) are usually very competitive and there is little a single producer can do to increase his profitability. The markets for differentiated products (e.g. therapeutics, special devices, and computer programs) allow a single producer much more opportunity to influence his profitability.

Technology is used by producers of both commodities and differentiated products. However, technology in the form of intellectual property is often the basic ingredient necessary to create a differentiated product. If many producers could use a new technology, the product would soon become a commodity.

This distinction is important when evaluating a technology. An objective of most nations that have or aspire to have modern industrial economies is to increase the portion of their economy dedicated to differentiated products, while reducing dependence on commodities.

D. The Evaluation Process. Evaluating an idea or discovery can be time consuming and costly. A laboratory can conserve its resources by using a multi-step evaluation process, highlighted on the system chart as Steps 15 and 20. Step 15, the PRELIMINARY VALUE SCREEN, is intended to be a weeding process to reduce the number of ideas under consideration to those which appear to have the best potential. The three primary purposes of this Step are to obtain preliminary indications of:

VALUE SCREEN, is intended to be a weeding process to reduce the number of ideas under consideration to those which appear to have the best potential. The three primary purposes of this Step are to obtain preliminary indications of:

14

- What the technology will actually do and how well it will do it from a technical standpoint,

- Identify what the market or markets may be for the technology, including its ability to meet a Government need, and

- Whether it can and should be protected as intellectual property.

If all three indications are positive, then the laboratory is justified in spending more resources for additional evaluation. This is what Step 20 is to indicate. The continuing evaluation may be analytical or it may be done by an actual market test.

If the invention will be used in a commercial product, the sooner a firm is involved in the development process, the more likely the chances of ultimate success. Once a patent application has been filed, the lab can start to seek a licensee. This is the market test approach. The analytical approach is needed if the lab has to do preliminary market and cost projections to interest a potential licensee.

The point is to work gradually into the evaluation process, committing or not committing additional resources on a controlled basis as knowledge is gained.

Part 2d. Conflict of Interest

Conflict of interest is often mentioned in conjunction with technology management by laboratories. While this paper is not to provide legal advice, there are indications that the term is frequently used incorrectly. Three different situations are often confused, but need to be recognized and handled separately:

A. Conflict of interest. A legal conflict of interest situation is probably one that:

- Is prohibited by Federal statute,

- Allows a Federal employee to commit the Government or Government resources including the employee's work time, without prior approval or subsequent management review, and

- May lead to personal benefit for the employee.

Most conflict of interest statutes were written before enactment of the Federal Technology Transfer Act and were based on the concepts that a Federal/industry relationship should be arm's-length and a Federal employee could serve only one master. These

Most conflict of interest statutes were written before enactment of the Federal Technology Transfer Act and were based on the concepts that a Federal/industry relationship should be arm's-length and a Federal employee could serve only one master. These

statutes must be applied in light of the new relationships Congress intended under the Act.

Agency regulations written before the Act that do not provide for Federal employees having relationships with more than one organization may need to be revised. While unheard of in most agencies, such arrangements have long been accepted and promoted by some. In addition, implementation of the Act requires agency regulations to accommodate the technological innovation process as it is used in the United States economy. This means that the public good may best be served by special treatment for innovating firms and restricted access to the technology on which a new product is based.

B. Congruence of interest, is a situation anticipated by the Act, where, for example, a laboratory employee inventor is allowed to contribute to and directly benefit from the commercialization of the invention where the employee can make a unique contribution that is in the interest of both the laboratory and a private firm. Patent licenses, cooperative R&D agreements, and employee ownership of inventions not managed by the laboratory are types of hand-in-hand congruence of interest situations which are fundamentally different from the arms-length relationships toward which the conflict-of-interest statutes were directed.

Congruence of interest situations are more like partnerships than typical Government/private sector, arms-length relationships, and the agreements establishing them should be similar to partnership agreements. In many cases, relationships between firms and laboratory employees that would result in conflict of interest situations if the employees acted on their own, can become congruence of interest through agreements between the laboratories and the firms.

C. Conflict of committment, or the competing demands for resources. This can arise, for example, when the services of an investigator are desired both to aid commercialization of a technology and to perform other laboratory work. If it arises, it is a management problem, not a legal conflict of interest issue. It should be solved on the basis of the laboratory's priorities, including its mission committments, commercialization objectives, desires to accommodate its staff, and the value of the technology.

The most difficult aspect of this for many to accept will probably be the fundamentally new types of relationships the Act permits. The Act was designed to bridge between what have formerly been two entirely separate cultures--industry and Government research. The bridge may involve co-work, co-management, co-acceptance of risks, and co-enjoyment of rewards. While some employees of a few agencies, particularly Agriculture

The most difficult aspect of this for many to accept will probably be the fundamentally new types of relationships the Act permits. The Act was designed to bridge between what have formerly been two entirely separate cultures--industry and Government research. The bridge may involve co-work, co-management, co-acceptance of risks, and co-enjoyment of rewards. While some employees of a few agencies, particularly Agriculture

and the VA have experience in these types of relationships, for most Government people, they will be entirely new. As such, the Act is plastic and waiting to be molded in the wisest and most imaginative ways that can be created.

One way an agency could approach this gradually, would be to develop preliminary policies or a statement of intent for the basic types of inventor participation in commercialization that the agency will normally allow. It could establish a review and approval process for proposals of types of participation that go beyond. The organizational levels that could approve more extensive participation should probably correspond with those that make or approve research project funding decisions for a laboratory. These levels will probably also be involved with decisions to approve cooperative R&D projects.

17

MANAGING TECHNOLOGY IN A GOVERNMENT-OPERATED LABORATORY

Federal Technology Management Division
Office of Economic Affairs
U.S. Department of Commerce

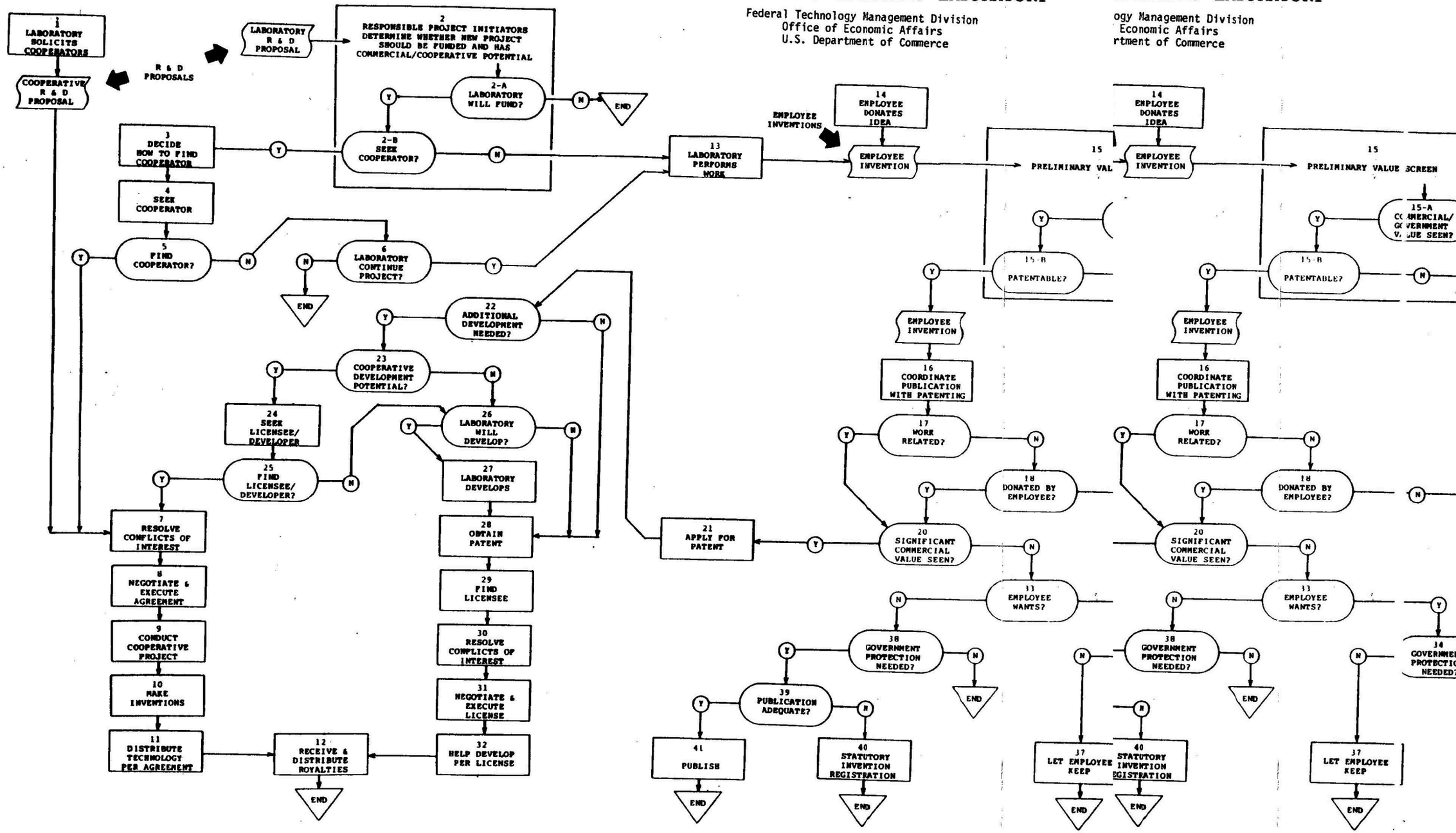

TECHNOLOGY IN A
OPERATED LABORATORY
ogy Management Division
Economic Affairs
rtment of Commerce

DRAFT

December 23, 1983

MANAGING AND TRANSFERRING INTELLECTUAL PROPERTY FORMS
OF GOVERNMENT TECHNOLOGY
Office of Productivity, Technology, and Innovation
U. S. Department of Commerce

Introduction:

Two fundamental, long term trends in the U. S. economy are the growing reliance on higher levels of technology and increasing foreign competition for sales of products that use new technologies. It is increasingly clear that the future of the economy will largely depend on how well new technologies are used to create products, markets, jobs, and returns on investments. Since the Federal Government is the primary supporter and a major performer of U. S. research and development, the economic health of the country will be directly affected by how well new technologies that result from Federal efforts are used by the private sector.

In addition to these trends, three recent statutes and several other factors require a review of how the Government protects and manages technology.

1. Small businesses and nonprofit organizations are now entitled to own inventions they create with Federal R&D funding. This statutory right was established because of a general recognition that the public only benefits from an invention after a firm develops, produces, and markets it. In many cases, a firm will only make the necessary investment if it is certain that it owns the invention or can obtain adequate license protection with minimal delays. A recent Presidential Memorandum extends the right of ownership to other recipients of Federal R&D funding.

2. The Stevenson-Wydler Act created a network of Research and Technology Applications Offices (called ORTAs) in the agencies with extensive R&D operations. These offices are to transfer technology developed by Federal laboratories to the private sector. Even agencies that develop inventions for their own use are required to have such a marketing or outreach function to stimulate the economy.

3. The Patent Office is increasing the charges for services to $3,200 per patent kept active for its full life. The current Federal portfolio of about 23,000 patents will be exempt from these charges, but if the portfolio were to be recreated and maintained, the cost would be over $70 million in Patent Office charges alone.

3. The Patent Office is increasing the charges for services to $3,200 per patent kept active for its full life. The current Federal portfolio of about 23,000 patents will be exempt from these charges, but if the portfolio were to be recreated and maintained, the cost would be over $70 million in Patent Office charges alone.

4. Less than 5% of the 28,000 patents owned by the Government in 1976, were licensed for commercial use. Primarily, this is primarily because most of the inventions have little or no commercial value, a fact which discourages firms from sifting through the portfolio in hopes of finding an idea to exploit. It is also because most agencies have made little effort to seek private sector users for even their most important inventions.

5. In contrast to agency practice, the universities that produce a significant number of inventions are careful to invest in patent protection and actively promote licensing of ideas that appear to have significant commercial potential. As a result, universities typically obtain royalty bearing licenses for about 35% of their patents.

6. The universities have created offices with the authority to promote and negotiate all aspects of technology transfer. Over time, firms have gained confidence in dealing with these single points of contact, and closer industry/ university cooperation has grown to the point of industry funded research agreements and university assistance for commercialization ventures.

7. Most major Federal laboratories work to meet Government needs such as defense, while a few work to meet general needs in fields such as health, pollution control, and transportation. The agencies typically do not assess the commercial marketability of inventions before making patent decisions. Where the purpose of research is to meet a Government need, most agency patent staffs are concerned almost exclusively with ensuring the Government's right to use inventions without paying royalties. Often, the inventions patented solely for defensive reasons have little or no commercial value--a fact that explains the low licensing rate of the Federal portfolio. American firms, with their tight cost constraints, tend to avoid the resulting confusion, while foreign interests, frequently with their governments' support, obtain and use important Federally funded developments in what could be American markets.

8. As yet, there are few provisions for making the decisions that will be required to avoid paying Patent Office maintenance charges on low value patents. These decisions should be based primarily on commercial potential.

9. ORTAs are frequently in a good position to evaluate the commercial potential of an invention because of their frequent contacts with industry. But ORTAs are often not consulted when patenting decisions are made.

that will be required to avoid paying Patent Office maintenance charges on low value patents. These decisions should be based primarily on commercial potential.

9. ORTAs are frequently in a good position to evaluate the commercial potential of an invention because of their frequent contacts with industry. But ORTAs are often not consulted when patenting decisions are made.

2

The Technology Transfer Function of ORTAs

The ORTAs, usually operating on a person-to-person basis, are involved in two basic forms of technology transfer.

1. Information--which includes advice, technical assistance, reports, and other forms of aid, usually provided at minimal or no cost, and usually based on work already performed in the laboratory system.

2. Intellectual Property--which includes patents, copyrights, technical data, rights to future inventions, and other forms of technology that can be owned, protected, assigned, or otherwise controlled.

Most ORTAs have concentrated on information transfers. These are less formal, easier to arrange, and appear more consistent with the wording of Section 11 of the Stevenson-Wydler Act.

Intellectual Property

While ORTAs have performed valuable services in disseminating information created in the laboratories, some observers argue that this work is not technology transfer at all. Under this argument, "technology transfer" means the passage of invention rights from an inventor to another party that will use the invention to produce and market a product. A related argument holds that the market value of a technology is inversely proportional to the number of firms that possess the same or equivalent knowledge.

Regardless of whether one accepts these views, it is clear that the primary opportunities for ORTAs to help create new products, large numbers of new jobs, and even new industries are likely to come from intellectual property transfers. A firm's chances of investment recovery and profits normally depend on control of the technology being developed.

Agencies most frequently transfer intellectual property created in Federal laboratories via patent licenses. Licensing is done primarily on a centralized basis, either by the patent staffs at agency headquarters or the Patent Licensing Office attached to the Center for Utilization of Federal Technology (CUFT) in the Department of Commerce. This Office has quadrupled its rate of licensing since FY 1980, with 60% of its inventions licensed exclusively. But centralized patent licensing still presents a number of problems, including:

--Some Government patent attorneys have interpreted the licensing provisions of P. L. 96-517 to require nonexclusive

attached to the Center for Utilization of Federal Technology (CUFT) in the Department of Commerce. This Office has quadrupled its rate of licensing since FY 1980, with 60% of its inventions licensed exclusively. But centralized patent licensing still presents a number of problems, including:

--Some Government patent attorneys have interpreted the licensing provisions of P. L. 96-517 to require nonexclusive

licensing if more than one firm applies for a license. This interpretation is not consistent with the objectives and legislative history of the Act, and it can inhibit commercial use. Firms with existing products may be more interested in protecting them than introducing new ones. Thus, a nonexclusive license to a firm intent on protecting its own product could discourage a potential new entrant by denying the exclusive license necessary to justify a significant investment.

-- Centralized agency licensing offices can tend to concentrate their efforts on inventions that are the easiest to sell, while foregoing attempts to license risky but important inventions. Inventions made to meet a known commercial need (such as pharmaceuticals) are attractive candidates for licensing. The centralized licensing operations may do less well at becoming advocates and market creators for technologies that were not developed to meet specific private sector needs or are more suitable for development by new, start-up firms.

-- Centralized agency licensing offices have frequently failed to coordinate their efforts with those of the ORTAs.

-- Patent licensing is normally restricted to existing inventions, while significant intellectual property transfers of rights to future laboratory inventions is usually avoided.

On the other hand, successful promotion of some inventions requires the resources of centralized licensing organizations including their access to potenatial nation-wide and international users. Two new worthwhile functions of the centralized licensing offices could be targeted advertising of specific technologies as a service for ORTAs which would negotiate the actual transfers, and providing advice and training to the ORTAs.

The process of innovation can start with a problem definition and extend through stages of research

ORTAs and Innovation

The process of innovation can start with a problem definition and extend through stages of research, invention, fund raising, prototype, testing, manufacturing design, plant development, manufacture, promotion, and distribution. Patent licensing is an abrupt discontinuity in this process introducing a major risk which kills most Government laboratory inventions. The basic premise of licensing--that there are many firms eager to buy good ideas is not true. The world just does not beat a path to the doorstep of the inventor of a better mousetrap for

definition and extend through stages of research, invention, fund raising, prototype, testing, manufacturing design, plant development, manufacture, promotion, and distribution. Patent licensing is an abrupt discontinuity in this process introducing a major risk which kills most Government laboratory inventions. The basic premise of licensing--that there are many firms eager to buy good ideas is not true. The world just does not beat a path to the doorstep of the inventor of a better mousetrap for

reasons that have been well documented elsewhere.

While the centralized patent licensing operations will remain an important element of the Government's system for transferring technological property, the decentralized ORTAs have natural advantages for some types of transfers because of their immediate proximity to the laboratories. The unique contribution that ORTAs can make is to arrange for gradual transfers of technology with controlled risks rather than abrupt discontinuities. An ORTA should be able to negotiate agreements of cooperation between labs and business firms that extend from initial research to manfacturing design in accordance with the needs and abilities of the parties. A "full service" ORTA should have the following functions and capabilities to optimize the transfer of research results from the laboratory which it serves:

-- Identify, evaluate, and protect or arrange for protection of new technologies.

-- Promote commercial use of the new technologies produced by the laboratory which may lead to new business ventures.

-- Coordinate with ORTAs of other labs when necessary to meet the needs of industry for technologies from more than one source.

-- Recommend research to meet market needs.

-- Seek venture capital to help start-up ventures.

-- Negotiate collaborative research projects with industry, including limited partnerships.

-- Administer policies that encourage employee-inventor start-ups and follow-on participation.

-- Administer a royalty sharing program with laboratory inventors.

-- Train and instruct laboratory personnel on invention, enterpreneurship and industrial innovation.

-- Assess and advise on how to manage potential conflicts of interest.

-- Grant patent licenses or assign future invention ownership rights as a quid pro quo for industry guarantees to develop, participate in, or contribute resources to further laboratory research efforts.

These functions are much like those performed by the ORTA counterpart offices in universities.

-- Grant patent licenses or assign future invention ownership rights as a quid pro quo for industry guarantees to develop, participate in, or contribute resources to further laboratory research efforts.

These functions are much like those performed by the ORTA counterpart offices in universities.

5

New ORTA Authorities

It appears to be no accident that technology complexes such as Silicon Valley, Boston's Route 128, Research Triangle, and Princeton's Forrestal Center have evolved around major universities. Direct access to the university and the university's right to transfer the results of its research on an exclusive basis is important to develop and commercialize new technologies. Other forms of assistance such as advice, continued involvement of university personnel, and various business services are also significant.

Federal laboratories have not served as nuclei for similar complexes. They often perceive themselves to be unable to enter into cooperative development arrangements because of organizational and legal restraints on the transfer of the research results on an exclusive basis, or they have seen efforts to assist commercialization as not related to their missions. As a consequence, most National reviews of the laboratories have concluded that too little of the results of lab research is used in the private sector.

This suggests that greater laboratory success in transferring the results of its research could be achieved by giving its ORTAs new authorities. These should include the authority to:

-- Negotiate arrangements that include disposition of future research results on an exclusive basis, acceptance of private sector funding, and formation of Government/private sector research teams.

-- Negotiate the assignment or licensing of Government-owned inventions.

-- Administer incentives to Federal employee inventors, including royalty sharing and the right of employees to own inventions that neither the Government nor a participating private sector organization plan to commercialize.

-- Arrange for Federal employee inventors to participate in the future development of an invention outside of the lab when this is necessary for successful commercialization.

Further Support for ORTAs

In addition to more authorities for ORTAs, it appears necessary to establish a system of organizational incentives that would encourage laboratories to support technology transfer and commercialization. The laboratories of agencies such as the

Further Support for ORTAs

In addition to more authorities for ORTAs, it appears necessary to establish a system of organizational incentives that would encourage laboratories to support technology transfer and commercialization. The laboratories of agencies such as the

Department of Defense and NASA, concentrate on meeting particular requirements of their agencies. Although the Stevenson Wydler Act requires these labs to have a few people engaged in technology transfer, increasingly specific management systems are causing Federal labs and their employees to concentrate on predetermined, mission-related objectives. Because of these systems, opportunities to have inventors assist the commercialization of their inventions are often seen as diversions that can not be justified. This problem exists in all other Federal laboratories, though perhaps to a lesser degree.

A second problem, is that the managers of many Government labs do not feel comfortable in allowing assistance to private business on a one-to-one basis. For a variety of reasons, they believe this may be wrong or that it can lead to trouble even if it is not wrong.

To overcome these problems, specific authorities to foster and promote technology transfer should be given to laboratory managers. In addition, management performance plans should include elements relating to successful technology transfer.

A third, frequently mentioned problem, is conflict of interest. All manner of arguments are presented to show why Federal employees should not be allowed to participate in commercialization efforts. What is missing in both the arguments and the regulations covering Federal employment, is a distinction between improper relationships where an employee benefits at the expense of the public interest, and proper relationships where cooperation is in the public interest. Present regulations and perhaps statutes, should be modified to allow active participation of Federal employee inventors in commercialization efforts where the inventor's unique knowledge is important to success. And the lab managers should receive credit for approving such arrangements.

As another form of organizational incentive, the labs could be allowed to retain part of an invention's royalties to use for future research. This would be similar to university practice and to contractor independent research and development programs funded by some agencies. Care must be exercised to ensure that budgetary controls are not weakened and that a proper balance is maintained between research missions and commercialization efforts.

Techniques should be developed and made available to the ORTAs to help evaluate the commercial potential of new technologies. These are particularly necessary to evaluate ideas that were not developed to meet known private sector needs. When new legislation authorizes use of Statutory Invention Disclosures, regulations or guidelines should be developed to help agencies decide when to seek patent or disclosure

Techniques should be developed and made available to the ORTAs to help evaluate the commercial potential of new technologies. These are particularly necessary to evaluate ideas that were not developed to meet known private sector needs. When new legislation authorizes use of Statutory Invention Disclosures, regulations or guidelines should be developed to help agencies decide when to seek patent or disclosure

protection. The new alternative will allow agencies to obtain defensive protection for their procurement intrests without continuing to clutter the Government's patent portfolio with inventions that have little or no commercial use.

Few Government jobs provide an individual with the training, background, and outlook necessary to perform the "full service" ORTA functions. A new category of professional employees entitled "Federal Technology Managers" should be created to establish and provide stability for this unique field. Previous legal, engineering, technology transfer, and product development, and entrepreneurial experience should be taken into full account when filling positions and making promotions in this new category of professional employee.

These officials would work directly in the laboratories to stimulate collaboration with the private sector and would be key elements in spinning off important discoveries to local high growth industries. The Federal Technology Managers would function as critical liaisons between the research profesionals employed in the laboratories and the private sector.

Once these changes are in place, there should be a sizable increase in the amount of Government developed technology used in the private sector. In addition, private sector funding can be expected to supplement laboratory budgets. This will both reduce the costs to taxpayers, and guide the agendas of the labs toward research needed by the private.

An Example of Technology Management--Managing Inventions

The following proposed system has been designed to show how ORTAs could perform. It concentrates on the identification and transfer of patentable inventions and shows how the ORTAs should relate to agency patent staffs and the Patent Licensing Office of the Center for Utilization of Federal Technology. It is intended to operate on a decentralized basis, with the agencies determining the optimum level.

Chart 1 shows the proposed flow of decisions and actions. This is a general presentation that considers only domestic patents and does not include some details.

The chart is divided into three segments by dotted lines. Two segments show what would be the responsibilities of an agency Patent Staff and the CUFT Patent Licensing Office. The third group of responsibilities should be performed through close coordination by the ORTAs.

The process begins for an employee invention with a determination (1) of whether it resulted from assigned duties. If not, the employee would own the invention and be free to do

Two segments show what would be the responsibilities of an agency Patent Staff and the CUFT Patent Licensing Office. The third group of responsibilities should be performed through close coordination by the ORTAs.

The process begins for an employee invention with a determination (1) of whether it resulted from assigned duties. If not, the employee would own the invention and be free to do

Chart 1

PROPOSED SYSTEM FOR MANAGING INVENTIONS

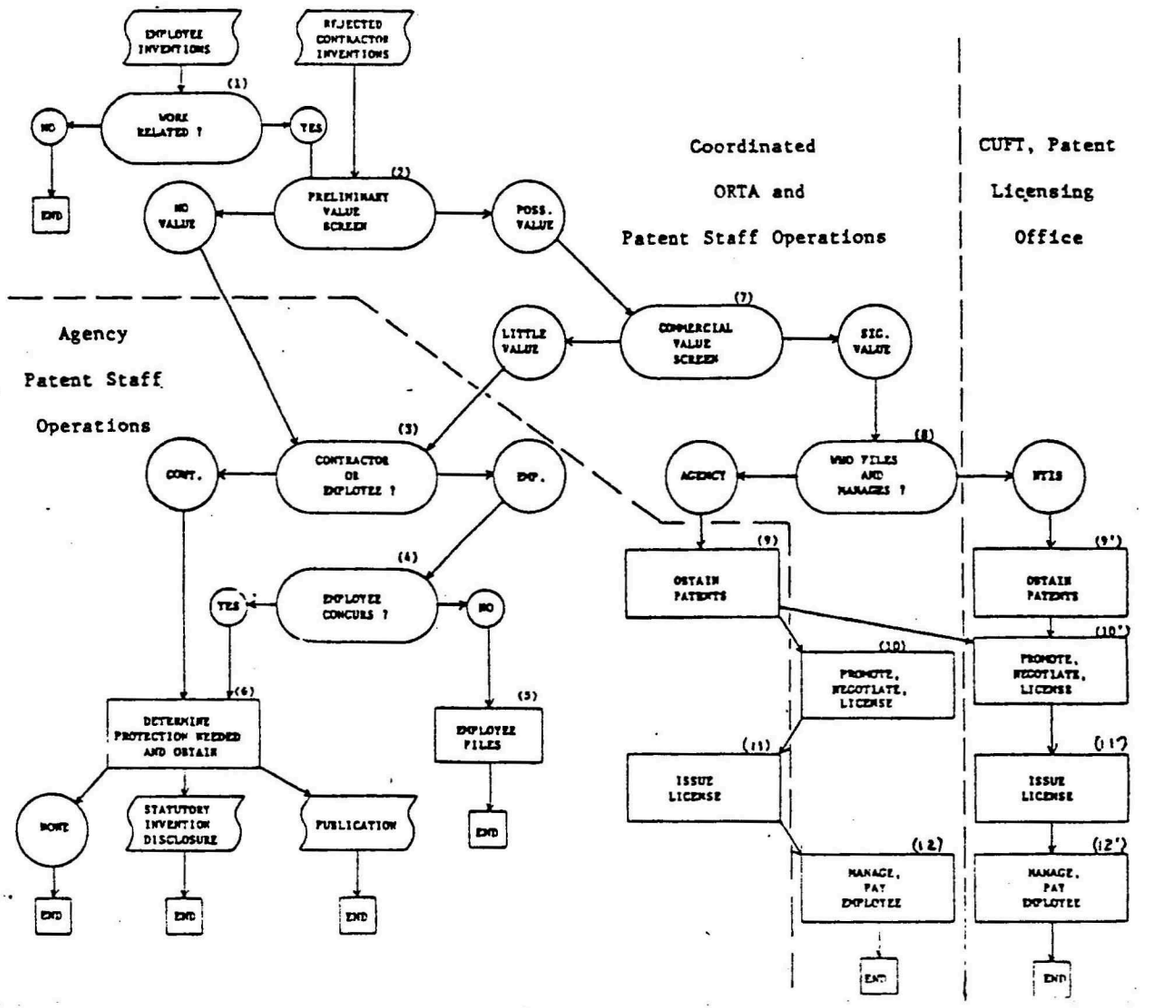

with it as he or she pleases. The existing PTO process for reviewing employee appeals would continue to resolve disputes between agencies and employees over whether an invention is work-related.

Under the proposed plan, agencies or CUFT would be able to accept non-work-related inventions offered by employees who want to avoid doing their own patenting and licensing. These inventions would be handled just as if they were work-related. Under present policy, non-work related inventions are not managed by agencies even if offered by employees.

The Government will initially have the right to acquire employee inventions that result from assigned duties as well as inventions renounced by contractors. These inventions will go through a preliminary screen (2) to determine if they may have commercial value. Commerce intends to develop simple and economical tests to separate the few inventions which may have commercial potential from the majority which clearly do not. Since part of the test will involve patent law, members of the agency Patent Staff will participate in the preliminary screening process. The inventions of contractors which are determined to have no commercial value will be separated from employee inventions (3).

An employee will be given an opportunity to agree or disagree (4) with a no-value determination. If the employee does not concur, he or she will have the right to file for his or her own patent (5) so long as the Government is guaranteed free use rights.

For inventions that the agency and the inventors agree have no commercial potential, the Patent Staff will determine the extent of protection needed and obtain it (6). The determination could be a "statutory invention disclosure" (as authorized by the proposed 1983 patent law amendments), simple publication to prevent others from patenting, or no protection at all. Emphasis will be on the lowest cost technique to meet the need.

An invention identified by the pre-screen (2) as possibly having significant value will be reviewed by the commercial value screen (7). The commercial value screen is a "black box" for which the process and criteria have yet to be worked out. It may consist of panels of experts with private sector knowledge. It may be a sequence of steps for progressively finer screening to control costs, and it may include attempts to find licensees. This step may rquire some degree of centralization if there are not enough experts for all agencies to employ their own panels and produce uniformly high quality decisions. We estimate that no more than 25% of all processed inventions will go to the commercial value screen. Screening panels will make recommendations on both domestic and foreign filing. The

control costs, and it may include attempts to find licensees. This step may rquire some degree of centralization if there are not enough experts for all agencies to employ their own panels and produce uniformly high quality decisions. We estimate that no more than 25% of all processed inventions will go to the commercial value screen. Screening panels will make recommendations on both domestic and foreign filing. The

Commerce Patent Licensing Office may participate in the screen because of its continuing contact with the invention marketplace.

Inventions found not to have significant commercial value will be handled just like inventions found to have no value by the preliminary screen. Employees can be expected to seek their own patents on a larger percentage of these since many of them may have some value.

The ORTA and the agency Patent Staff will decide whether the agency or CUFT should file a patent application for an invention of significant commercial potential (8). Once this determination is made, patents will be obtained if possible (9 & 9'). Promotion and negotiation of license steps will follow (10 & 10'). Once a license is issued (11 & 11'), royalty or other payments will begin, and a substantial share will be transferred to the inventing employee (12 & 12').

An agency might opt to obtain its own patents, then transfer them to CUFT for promotion, licensing, and management. Alternatively, an agency might transfer a license to CUFT for management and inventor payment since this involves a specialized financial system or authorities and OPM approval.

Chart 2 shows an estimate of the Government-wide volumes of inventions that might be expected for each decision or action assuming 1700 employee and 400 rejected contractor inventions. Key summary estimates are based on 2000 inventions going through the preliminary screen. (100 inventions of the 2100 total would be diverted to the employees because they wpould not be work-related and the employees do not desire Government handling.)

-- 500 would be protected by statutory invention disclosures.

-- 1100 would need no protection or merely publication.

-- 100 would be patented by employees.

-- The Government would only apply for 300 regular U. S. patents plus an unestimated number of foreign patents.

-- 30% of the new patents would be licensed -- a figure more comparable with university practice.

-- 75% of the inventions could be handled by low cost processes.

These are, of course, only estimates. They are based on published statistics for agency operations from 1970-76, agency patenting rates through 1982, and studies of university patent management.

processes.

These are, of course, only estimates. They are based on published statistics for agency operations from 1970-76, agency patenting rates through 1982, and studies of university patent management.

Chart 2

PROPOSED SYSTEM FOR MANAGING INVENTIONS

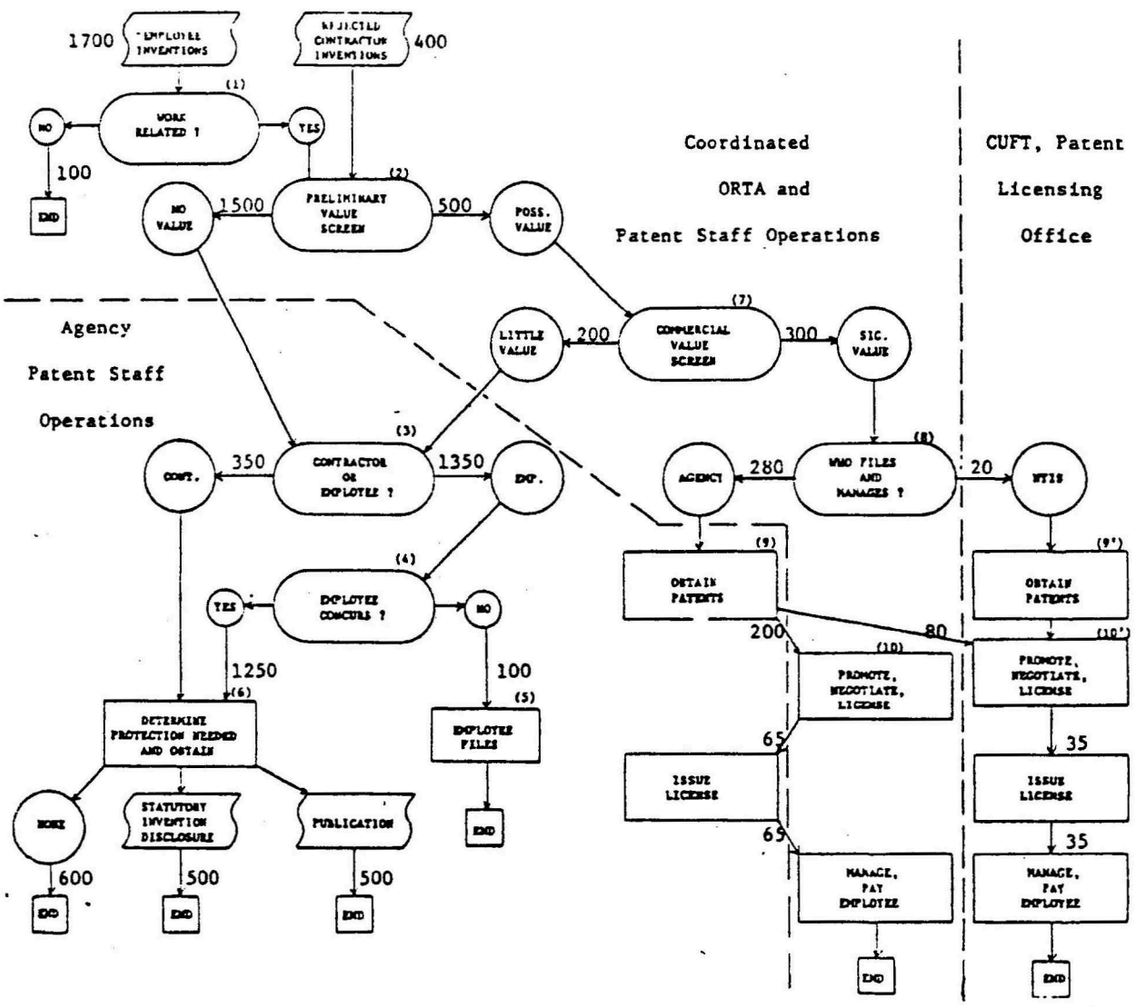

Principles, Assumptions, and the Government's Interest

This proposal for managing inventions is based on the premise that the Government can have five interests in patentable technology that results from Federal resesarch and development funding. They are to:

1. Avoid payment of royalties if something brought by the Government includes the technology.

2. Promote private sector use of the technology if it has potential commercial value.

3. Preserve valuable foreign patent rights for domestic firms.

4. Ensure fair treatment and rewards for the inventing contractor or Federal employee.

5. Hold protection costs to a minimum.

This proposal has been developed to serve all of these interests. The system is based on the following principles and assumptions:

1. Agency technology and patent operations should be closely coordinated to adequately serve all five interests.

2. ORTAs should be involved in determining which Government-owned, patentable inventions have significant commercial potential or transfer value needing the protection of regular patents, as well as promoting, licensing, and managing valuable patents.

3. Agency Patent Staffs should concentrate on obtaining lowest-cost protection of Government use rights, obtaining U. S. and foreign patents on commercially valuable inventions, and assisting in the licensing of patented technology. The CUFT program should assist in this when assignments and custody transfers are made.

4. Most valuable inventions of R&D contractors will be patented by the contractors. The few that contractors renounce will probably have little or no commercial value, but should be reviewed to ensure that valuable rights are protected. In most cases, this review can be done quickly and economically.

5. Most inventions of Federal employees will have little commercial value. The majority of these can be identified with relative ease.

6. Agencies should obtain the lowest practical level of

most cases, this review can be done quickly and economically.

5. Most inventions of Federal employees will have little commercial value. The majority of these can be identified with relative ease.

6. Agencies should obtain the lowest practical level of

invention, the prospect of financial rewards could lead to distortion of research or a distraction of the employee from his primary work. But such problems are common to any incentive system that rewards for only part of a person's job. This proposal to reward for inventions is based on the assumption that more ideas will be developed and reported than under present policy and that the results would outweigh the possibility of unmanageable research distortion.

The post-invention conflicts involve the competing demands for an employee's time and the possibility of his doing business with firms that also do business with the Government. Under this proposal, there can be opportunities for both types of conflicts, but they can be managed. In some cases, existing regulations that govern outside activities of employees are adequate to handle the competing time demands. In other cases, an employee can be granted administrative leave, allowed to take extended leave without pay, or have his job description modified to include specific industry assistance activities. All of these will become easier when there is an organizational incentive for the laboratories to actively support commercialization. On the other hand, an employee should not be allowed to participate in any procurement or financial assistance award action that could use his or a competing invention.

Conclusion

This proposal is designed to be the basis for discussion to the end that a more effective technology management and transfer system is developed.

13

MANAGING TECHNOLOGY IN A GOVERNMENT-OPERATED LABORATORY

Federal Technology Management Division
Office of Economic Affairs
U.S. Department of Commerce

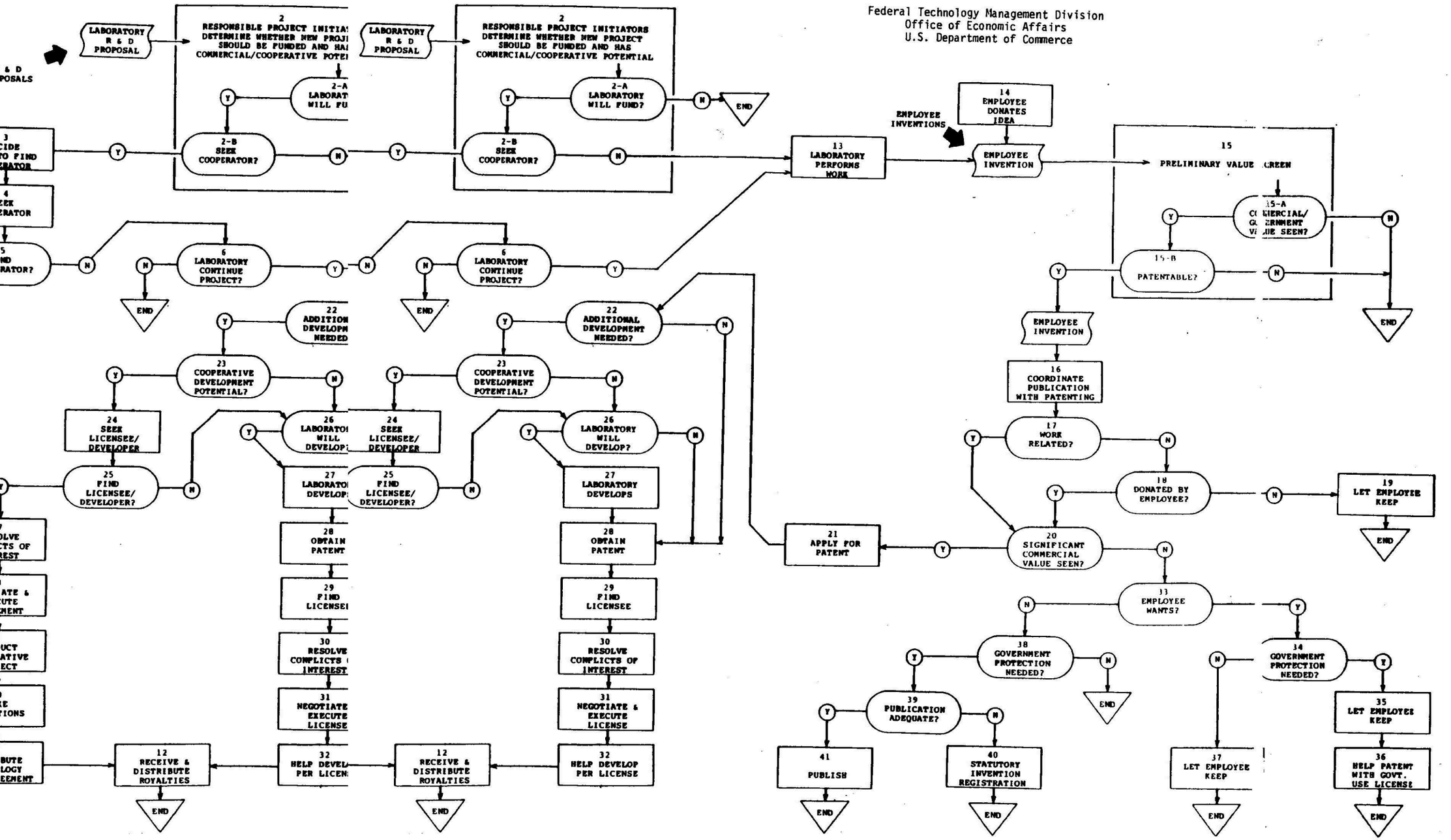

5/6/87

MANAGING TECHNOLOGY IN A GOVERNMENT-OPERATED LABORATORY

Federal Technology Management Division
Office of Economic Affairs
U.S. Department of Commerce

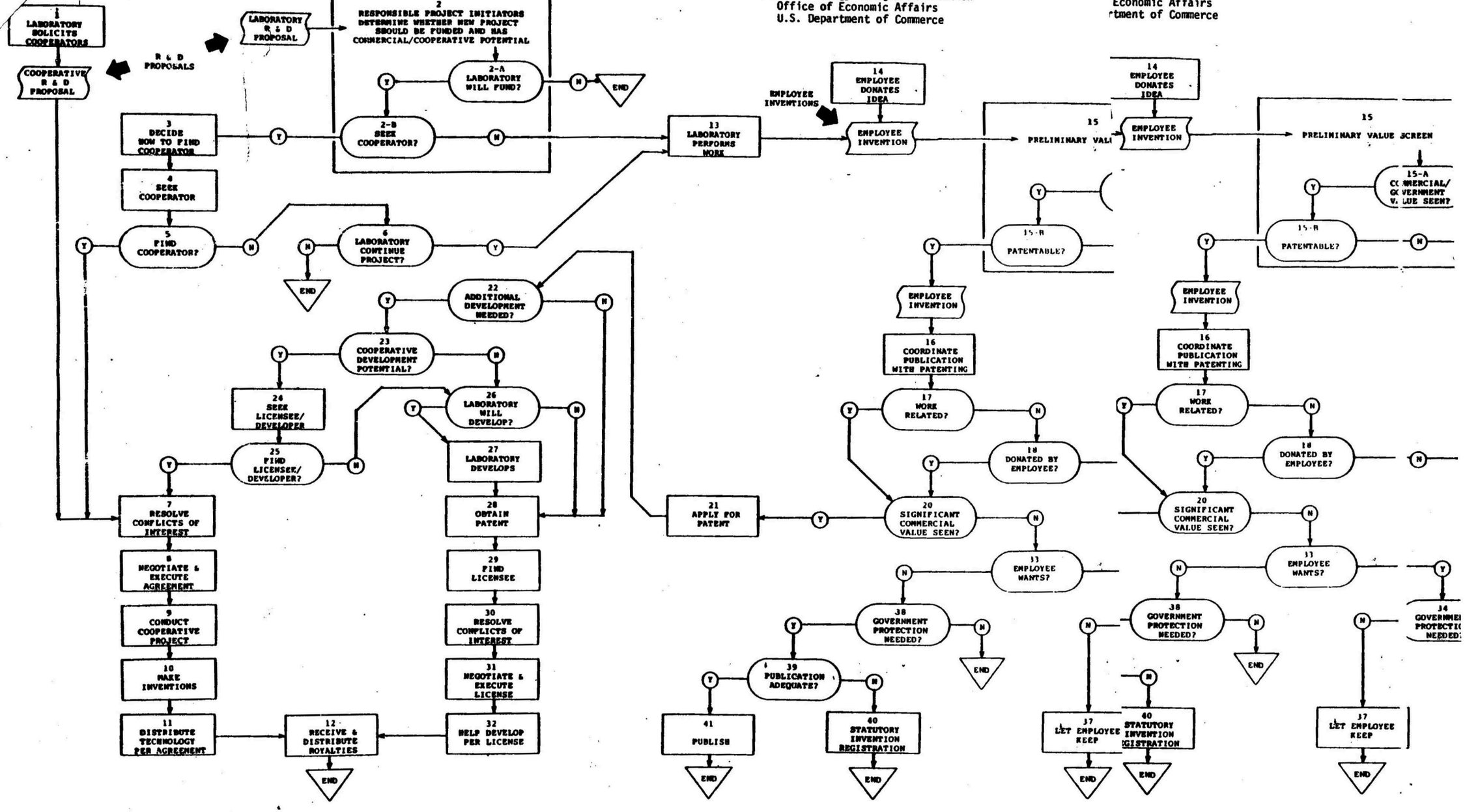

MANAGING TECHNOLOGY IN A GOVERNMENT-OPERATED LABORATORY

Federal Technology Management Division
Office of Economic Affairs
U.S. Department of Commerce

