IN THE UNITED STATES PATENT AND TRADEMARK OFFICE
BEFORE THE BOARD OF PATENT APPEALS AND INTERFERENCES

ATTY.'S DOCKET: OLSSON=8

In re Application of:	Art Unit: 3744
Lennart OLSSON	Examiner: W. TAPOLCAI
Appln. No.: 09/236,343	Washington, D.C.
Filed: January 25, 1999	January 29, 2001
For: APPARATUS FOR FREEZING	

REPLY BRIEF

Honorable Commissioner of Patents and Trademarks
Washington, D.C. 20231

Sir:

This is in response to the November 28, 2001, Examiner's Answer to Appellant's October 23, 2000, Appeal Brief in the above identified application.

Appellant's response is limited to paragraphs (5) and (11) of the Examiner's Answer in addition to Appellant's request for an oral hearing before the Board.

Paragraph (5) - The Summary of the Invention

With regard to paragraph (5), Appellant submits that the Examiner's indication that,

> "The summary of the invention contained in the brief is deficient because it is based on amendments to the specification and drawings

which were not entered because they contained new matter.",

is either incorrect or not established.

As the Board will note, amendments were made in Appellant's August 11, 1999, response to the Examiner's first Office Action of May 13, 1999. These amendments were directed to insertion of paragraph headings on pages 1 and 4, deletion of lines 1-3 on page 2, a clarifying language change to line 36, page 5 and line 1, page 6, idiomatic changes to claim 1 and corrections to Figs. 1 and 2 to identify trays 1 in Fig. 2.

The Examiner's August 19, 1999, Final Office Action makes no reference or objection to any of these amendments on either the Office Action Summary sheet or in the body of the rejection. The Examiner's only comments directed to Appellant's August 11 response are limited to an indication in paragraph 4 of the rejection that Appellant's arguments were not persuasive.

There is no further reference to these amendments by the Examiner prior to appeal. Appellant submits that having been given an opportunity prior to appeal, it would have maintained that the portion of the August 11, 1999, amendments referenced on page 3 of its brief and objected to by the Examiner do not present new matter. Since the only new matter objection made by the Examiner prior to appeal was included in his December 30, 1999, Advisory Action and

was directed to different amendments submitted with Appellant's December 20, 1999, response, Appellant submits that the August 11, 1999, amendments should be considered by the Board absent any Examiner objections to the amendments prior to appeal.

However, should the Board determine that the August 11, 1999, amendments be excluded from consideration, Appellant respectfully submits that their exclusion does not in any way effect the skilled artisan's ability to make and use the invention under 35 U.S.C. § 112, first paragraph, without undue experimentation.

Paragraph (11) - Response to Argument

With regard to paragraph (11), Appellant submits that the Examiner's position fails to make a prima facie case for non-enablement under 35 U.S.C. § 112, first paragraph, for the following reasons:

The Examiner continues to maintain that claim 1 and claims dependent therefrom are not enabled on the basis that

> "one skilled in the art would conclude that the plate elements 2 and 3 (as shown in Fig. 1) are permanently bonded as otherwise the tray thus formed would not be able to hold a liquid to be frozen."

This observation is made completely out-of-context with the rest of the application wherein permanent bonding of elements 2, 3 is directly refuted by at least the following;

1) the language of claim 1 establishing that;

...the tray (1) consists of a plurality of elements (2, 3), which are juxtaposed to form a surface area (4), said elements being movable relative to each other to change a relative position of at least one element at a time.... (underlining added)

and

2) the supporting passages from the specification that elements 2, 3 of Fig. 1 are movable relative to one another as identified on pages 12-14 of Appellant's brief.

Further, the Examiner's supposition that unless elements 2,3 are bonded together the tray 1 "would not be able to hold a liquid to be frozen" is clearly based on personal opinion not supported by evidence and is also directly refuted on page 4, lines 20-23 of the specification as follows:

"The surface area 4 (of tray 1) is continuous and unbroken, i.e. tight such that cavities 5 hold a liquid food product that has been poured into them."

It is also noted that first two paragraphs on page 2 of the specification indicate that the food to be frozen in the tray can also be "solid" or "semiliquid" in addition to being liquid. Clearly, solid or semiliquid food will be held in tray 1 when elements 2, 3 are compressed together as shown in Fig. 1 notwithstanding movability of elements 2,3 after freezing.

The Examiner continues by suggesting that the heart of the matter is failure to show "hinges" on elements 2, 3, i.e. "it is not clear at all that elements 2, 3 are connected by hinges."

In this regard, the Examiner fails to note that claim 1 and the claims dependent therefrom do not require or claim "hinges" to provide movability between elements 2, 3 as set out in claim 1. Further, Appellant respectfully submits that movability between elements can be provided by the skilled artisan by any number of conventional means including the hinges shown in Fig. 2 without undue experimentation. Further, the Examiner has provided no evidence or argument that use of such conventional means between elements 2, 3 of Fig. 1 involves "undue experimentation."

The Examiner continues by indicating that,

> "It is not at all clear as to how the conveyor belt consists of the trays 1."

Here the Examiner fails to note that claim 1 is directed to only a novel tray 1 made up of a plurality of elements (2, 3; 9) with no reference to its incorporation in a conveyor belt. Only claims 6 and 12-16 are directed to the elements (2, 3; 9) of tray 1 being incorporated in a conveyor belt (8). Accordingly, if the skilled artisan would need to use "undue experimentation" to incorporate elements (2, 3; 9) of tray 1 into conveyor belt (8) only claims 6 and 12-16 would not be enabled.

However, Appellant submits that the incorporation of elements (2, 3; 9) of tray 1 into conveyor belt (8) as claimed in claims 6 and 12-16 is supported by the application as originally submitted. Further, the Examiner's position on conveyor belt 8, even if correct, does not support that claim 1 directed to tray 1 alone is not enabled for the reasons stated above.

Further, regarding conveyor belt 8, Appellant first notes that the August 11, 1999, amendments to the first Office Action corrected Fig. 2 specifically to identify which of elements 9 make up a tray 1 while moving in path A of the figure. Appellant's identification of the trays in Fig. 2 was in direct response to the Examiner's indication in the first Office Action that,

> "It is not understood how the conveyor belt 8 of Fig. 2 consists of a plurality of trays 1".

As indicated above, the Examiner's August 19, 1999 Final Office Action made no comment on this amendment other than indicating that the Appellant's arguments were not persuasive. No reasons were provided and no attempt was made by the Examiner to explain why "undue experimentation" would be necessary to identify trays 1 in Fig. 2.

Appellant submits that the specification with or without amended Fig. 2 clearly indicates how the elements 2, 3 of tray 1 are incorporated in conveyor belt 8. In this regard original line 36, page 4 onto line 1, page 5, indicates that;

> "This conveyor belt 8 thus may consist of e.g. a plurality of trays 1, which are interconnected in the same manner as elements 2 and 3, of which they (the trays) are each made up."
> (parenthetical clause added)

This sentence as well as other portions of the specification noted by the Examiner clearly indicates that conveyor belt 8 is made up of a number of the tray 1 as it is shown in Fig. 1. In this regard, Appellant asks the Board to note that Appellant amended Fig. 2 by labeling trays 1 to clarify that each labeled tray 1 in Fig. 2 is made up of the same number of elements 9 as the number of elements 2, 3 making up the tray 1 of Fig. 1. This labeling is clearly supported by at least the equivalency established

in claim 1 that either the same plurality of elements 9 or elements 2, 3 make up each tray 1.

Accordingly, even without Appellant's clarifying labeling, the sentence quoted above on pages 4-5 and claim 1 would permit the skilled artisan to identify the trays 1 on conveyor belt 8 without undue experimentation. The Examiner has provided no argument as to why this position is not supportable or any support as to why the skilled artisan would need to exercise "undue experimentation" to identify tray 1 on conveyor belt 8.

CONCLUSION

§ 2164.04 and 2164.05 of MPEP indicated that;

"It is incumbent upon the Patent Office, whenever a rejection on this basis is made, to explain *why* it doubts the truth or accuracy of any statement in a supporting disclosure and to back up assertions of its own with acceptable evidence or reasoning which is inconsistent with the contested statement."

and further that;

"This can be done by making specific findings of fact, supported by the

evidence, and then drawing conclusions based on these findings of fact."

and that;

"The Examiner should never make the determination based on personal opinion. The determination should always be based on the weight of all the evidence."

Clearly the Examiner's position on the permanent bonding of elements 2, 3 in Fig. 1 is not supported by evidence or reasoning that rebuts the truth or accuracy of the passages of the specification cited by Appellant which refutes his position. Applicant submits that the Examiner's position is based solely on the Examiner's personal opinion and does not support the position that claim 1 and claims dependent therefrom are not enabled.

Further, with regard to the Examiner's position regarding the structure of conveyor belt 8 (which feature is included only in claims 6 and 12-16), the Examiner has failed to indicate why in the face of Appellant's stated position the original specification or specification as amended by Appellant's August 11, 1999, amendment requires undue experimentation to identify tray 1 in conveyor belt 8.

Appellant submits that the Examiner has failed to make a prima facie case of non-enablement and respectfully requests that the Examiner's rejection of the claims regarding enablement under 35 U.S.C. § 112, first paragraph

be reversed and the application be allowed. Appellant further requests that an oral hearing be granted to permit Appellant to respond to any questions that the Board may have.

Respectfully submitted,

BROWDY AND NEIMARK, P.L.L.C.
Attorneys for Applicant(s)

By _____
Norman J. Latker
Registration No. 19,963

NJL:dr
Telephone No.: (202) 628-5197
Facsimile No.: (202) 737-3528
F:\,A\Awap\Olsson8\PTO\replybrief29jan01.doc

In Re Application of: Lennart OLSSON

Application No.: 09/236,343

Filed: January 25, 1999

For: APPARATUS FOR FREEZING

Art Unit: 3744

Examiner: W. TAPOLCAI

Washington, D.C.

Atty.'s Docket: OLSSON=8

Date: October 23, 2000

THE COMMISSIONER OF PATENTS AND TRADEMARKS
Washington, D.C. 20231

Sir:

Transmitted herewith is an [ ] Amendment [XX] APPEAL BREIF
in the above-identified application.

[ ] Small entity status of this application under 37 CFR 1.9 and 1.27 has been established by a verified statement previously submitted

[ ] A verified statement to establish small entity status under 37 CFR 1.9 and 1.27 is enclosed.

[ ] No additional fee is required.

[XX] The fee is included below.

	(Col. 1) CLAIMS REMAINING AFTER AMENDMENT		(Col. 2) HIGHEST NO. PREVIOUSLY PAID FOR	(Col. 3) PRESENT EXTRA EQUALS	SMALL ENTITY RATE	SMALL ENTITY ADDITIONAL FEE	OR	OTHER THAN SMALL ENTITY RATE	OTHER THAN SMALL ENTITY ADDITIONAL FEE
TOTAL	*	MINUS	** 20	0	x 9	$		x 18	$
INDEP.	*	MINUS	*** 3	0	x 40	$		x 80	$
FIRST PRESENTATION OF MULTIPLE DEP. CLAIM					+ 135	$		+ 270	$
					ADDITIONAL FEE TOTAL	$	OR	TOTAL	$

* If the entry in Col. 1 is less than the entry in Col. 2, write "0" in Col. 3.

** If the "Highest Number Previously Paid for" IN THIS SPACE is less than 20, write "20" in this space.

*** If the "Highest Number Previously Paid for" IN THIS SPACE is less than 3, write "3" in this space.

The "Highest Number Previously Paid For" (total or independent) is the highest number found from the equivalent box in Col. 1 of a prior amendment of the number of claims originally filed.

[XX] Conditional Petition for Extension of Time

If any extension of time for a response is required, applicant requests that this be considered a petition therefor.

[ ] It is hereby petitioned for an extension of time in accordance with 37 CFR 1.136(a). The appropriate fee required by 37 CFR 1.17 is calculated as shown below:

Small Entity			Other Than Small Entity		
Response Filed Within			Response Filed Within		
[ ]	First	- $ 55.00	[ ]	First	- $ 110.00
[ ]	Second	- $ 195.00	[ ]	Second	- $ 390.00
[ ]	Third	- $ 445.00	[ ]	Third	- $ 890.00
[ ]	Fourth	- $ 695.00	[ ]	Fourth	- $ 1390.00
Month After Time Period Set			Month After Time Period Set		

[ ] Less fees ($_____) already paid for ___ month(s) extension of time on _____.

[ ] Please charge my Deposit Account No. 02-4035 in the amount of $_____.

[XX] Credit Card Payment Form, PTO-2038, is attached, authorizing payment in the amount of $310.00.

[ ] A check in the amount of $_____ is attached (check no.).

[XX] The Commissioner is hereby authorized and requested to charge any additional fees which may be required in connection with this application or credit any overpayment to Deposit Account No. 02-4035. This authorization and request is not limited to payment of all fees associated with this communication, including any Extension of Time fee, not covered by check or specific authorization, but is also intended to include all fees for the presentation of extra claims under 37 CFR §1.16 and all patent processing fees under 37 CFR §1.17 throughout the prosecution of the case. This blanket authorization does not include patent issue fees under 37 CFR §1.18.

BROWDY AND NEIMARK

Attorneys for Applicant(s)

Facsimile: (202) 737-3528
Telephone: (202) 628-5197

By: _____
Norman J. Latker
Registration No. 19,963

PTO-2038 (02-2000)
Approved for use through 01/31/2003. OMB 0651-0043
United States Patent and Trademark Office; U.S. DEPARTMENT OF COMMERCE
Under the Paperwork Reduction Act of 1995, no persons are required to respond to a collection of information unless it displays a valid OMB control number.

United States Patent & Trademark Office

Credit Card Payment Form

Please Read Instructions before Completing this Form

Credit Card Information

Credit Card Type:	Visa MasterCard (American Express) Discover
Credit Card Account #:	3727-126626-01004
Credit Card Expiration Date:	08/03
Name as it Appears on Credit Card:	Roger L. Browdy
Payment Amount: $(US Dollars):	310.00
Signature: Roger L Browdy	Date: 10-23-00

Refund Policy: The Office may refund a fee paid by mistake or in excess of that required. A change of purpose after the payment of a fee will not entitle a party to a refund of such fee. The Office will not refund amounts of twenty-five dollars or less unless a refund is specifically requested, and will not notify the payor of such amounts (37 CFR 1.26). Refund of a fee paid by credit card will be via credit to the credit card account.
Service Charge: There is a 50.00 service charge for processing each payment refused (including a check returned "unpaid") or charged back by a financial institution (37 CFR 1.21(m)).

Credit Card Billing Address

Street Address 1:	624 Ninth Street, NW		
Street Address 2:			
City:	Washington		
State:	DC	Zip/Postal Code :	20001
Country:	USA		
Daytime Phone #:	202-628-5197	Fax #:	202-737-3528

Request and Payment Information

Description of Request and Payment Information:
APPEAL BREIF

Patent Fee	Patent Maintenance Fee	Trademark Fee	Other Fee
Application No. 09/236,343	Application No.	Serial No.	IDON Customer No.
Patent No.	Patent No.	Registration No.	
Attorney Docket No. OLSSON-8		Identify or Describe Mark	

If the cardholder includes a credit card number on any form or document other than the Credit Card Payment Form, the United States Patent & Trademark Office will not be liable in the event that the credit card number becomes public knowledge.

In Re Application of: Lennart OLSSON

Application No.: 09/236,343

Filed: January 25, 1999

For: APPARATUS FOR FREEZING

Art Unit: 3744

Examiner: W. TAPOLCAI

Washington, D.C.

Atty.'s Docket: OLSSON=8

Date: October 23, 2000

THE COMMISSIONER OF PATENTS AND TRADEMARKS
Washington, D.C. 20231

Sir:

Transmitted herewith is an [ ] Amendment [XX] APPEAL BREIF
in the above-identified application.

[ ] Small entity status of this application under 37 CFR 1.9 and 1.27 has been established by a verified statement previously submitted

[ ] A verified statement to establish small entity status under 37 CFR 1.9 and 1.27 is enclosed.

[ ] No additional fee is required.

[XX] The fee is included below.

	(Col. 1) CLAIMS REMAINING AFTER AMENDMENT		(Col. 2) HIGHEST NO. PREVIOUSLY PAID FOR	(Col. 3) PRESENT EXTRA EQUALS	SMALL ENTITY RATE	SMALL ENTITY ADDITIONAL FEE	OR	OTHER THAN SMALL ENTITY RATE	OTHER THAN SMALL ENTITY ADDITIONAL FEE
TOTAL	*	MINUS	** 20	0	x 9	$		x 18	$
INDEP.	*	MINUS	*** 3	0	x 40	$		x 80	$
FIRST PRESENTATION OF MULTIPLE DEP. CLAIM					+ 135	$		+ 270	$
					ADDITIONAL FEE TOTAL	$	OR	TOTAL	$

* If the entry in Col. 1 is less than the entry in Col. 2, write "0" in Col. 3.

** If the "Highest Number Previously Paid for" IN THIS SPACE is less than 20, write "20" in this space.

*** If the "Highest Number Previously Paid for" IN THIS SPACE is less than 3, write "3" in this space.

The "Highest Number Previously Paid For" (total or independent) is the highest number found from the equivalent box in Col. 1 of a prior amendment of the number of claims originally filed.

[XX] Conditional Petition for Extension of Time

If any extension of time for a response is required, applicant requests that this be considered a petition therefor.

[ ] It is hereby petitioned for an extension of time in accordance with 37 CFR 1.136(a). The appropriate fee required by 37 CFR 1.17 is calculated as shown below:

Small Entity Response Filed Within		Other Than Small Entity Response Filed Within	
[ ] First	- $ 55.00	[ ] First	- $ 110.00
[ ] Second	- $ 195.00	[ ] Second	- $ 390.00
[ ] Third	- $ 445.00	[ ] Third	- $ 890.00
[ ] Fourth	- $ 695.00	[ ] Fourth	- $ 1390.00
Month After Time Period Set		Month After Time Period Set	

[ ] Less fees ($_____) already paid for ___ month(s) extension of time on _____.

[ ] Please charge my Deposit Account No. 02-4035 in the amount of $_____.

[XX] Credit Card Payment Form, PTO-2038, is attached, authorizing payment in the amount of $310.00.

[ ] A check in the amount of $_____ is attached (check no.).

[XX] The Commissioner is hereby authorized and requested to charge any additional fees which may be required in connection with this application or credit any overpayment to Deposit Account No. 02-4035. This authorization and request is not limited to payment of all fees associated with this communication, including any Extension of Time fee, not covered by check or specific authorization, but is also intended to include all fees for the presentation of extra claims under 37 CFR §1.16 and all patent processing fees under 37 CFR §1.17 throughout the prosecution of the case. This blanket authorization does not include patent issue fees under 37 CFR §1.18.

BROWDY AND NEIMARK

Attorneys for Applicant(s)

Facsimile: (202) 737-3528
Telephone: (202) 628-5197

By: _____
Norman J. Latker
Registration No. 19,963

TABLE OF CONTENTS

1.	STATUS OF CLAIMS	1
2.	STATUS OF AMENDMENTS	2
3.	SUMMARY OF THE INVENTION	2
4.	ISSUES	5
5.	GROUPING OF THE CLAIMS	6
6.	ARGUMENT	6
7.	APPENDIX I	19
8.	APPENDIX II	23

IN THE UNITED STATES PATENT AND TRADEMARK OFFICE
BEFORE THE BOARD OF PATENT APPEALS AND INTERFERENCES

ATTY.'S DOCKET: OLSSON=8

In re Application of:	)	Art Unit: 3744
Lennart OLSSON	)	Examiner: W. TAPOLCAI
Appln. No.: 09/236,343	)	Washington, D.C.
Filed: January 25, 1999	)	October 23, 2000
For: APPARATUS FOR FREEZING	)	

BRIEF ON BEHALF OF APPELLANT

Honorable Commissioner for Patents
Washington, D.C. 20231

Sir:

The present appeal is taken from the Examiner's August 23, 2000, Action in finally rejecting claims 1-20. A clean copy of these claims, double spaced, appears in Appendix I to this Brief.

STATUS OF CLAIMS

The Examiner's Office Action summary indicates that claims 1-20 are rejected. However, the Examiner's 35 U.S.C. § 112, first paragraph detailed rejection on page 1 of the August 22, 2000, Office Action, which is the only rejection of the claims, is limited to rejection of claims 1-7 and 10-20.

Claims 8 and 9 had been withdrawn from consideration in prior Office Actions as being directed to the non-elected species of Figs. 4-6 and have not been otherwise addressed or rejected by the Examiner under 35 U.S.C. § 102, 103 or 112.

Appellants' appeal is directed to all of claims 1-20 on the basis that claim 1, which has been allowed along with claims 2-7 and 10-20 subject only to the above note 35 U.S.C. § 112, first paragraph rejection, is generic to non-elected claims 8 and 9.

STATUS OF AMENDMENTS

No amendments have been filed subsequent to the August 22, 2000, Final Action. However, Appellant had made amendments to the specification and drawings in its August 11, 1999, response to the Examiner's First Office Action on May 13, 1999, to which the Examiner did not object to in his November 19, 1999, Final Office Action, later withdrawn. The amendments made on page 4, line 36, page 5, line 1, and the drawings are submitted to have been entered absent any objection by the Examiner but are not acknowledged in the Examiner's quote of these sentences in his August 23, 2000, Final Action. Appellant discusses this further below.

SUMMARY OF THE INVENTION

The invention is directed to a tray (1, 31 shown in Figs. 1 and 4) designed to receive food products for freezing while traveling together with other identical trays as a conveyor belt 8 between two rollers 11, 12 through an insulated housing 15 where cold air jets for freezing are discharged on trays 1 (shown in combination in Figs. 2 and 3).

Each tray (1, 31) consists of a plurality of elements (23; 9; 22, 23) which form when juxtaposed together by push rod 13 (see Fig. 2) an upper surface area (4; 31 shown in Figs. 1 and 4) to carry the food product for freezing. Each of the elements (2, 3; 9; 22, 23) are moveable relative to each other beyond brake block 14 as they move around roller 12 so as to disengage the food product frozen in the trays as the conveyor belt 8 of trays 1 moves between rollers 11 and 12 and unloads the disengaged food product onto belt conveyors 16 and 17.

As made clear from Figs. 1, 2 and page 4, line 36, page 5, line 1 as amended in Appellant's August 11, 1999 response, elements 9 which comprise elements 2 and 3 make contact with each other to form horizontal and assembled trays 1 having a surface area 4 on the upper side of each assembled tray 1. Thus each assembled tray 1 is continuous and unbroken, i.e., tight, such that the cavities 5 can hold a liquid food

product that has been poured into them (while moving in path A), (see page 4, lines 16-23 of the specification).

When moving in path A, the temperatures of the assembled trays is kept low so that a crust of frozen product is immediately formed when the liquid food product is poured into the trays at the supply end 18. The food product in the trays is fully frozen while the trays 1 move to discharge end 19, (roller 12). (See page 5, lines 22-29 of the specification).

When the frozen products in the trays arrive at roller 12, they are removed from the conveyor belt substantially without change of orientation as the elements 9 making up assembled tray 1 move relative to one another around the roller 12 and open each tray.

To further assist in understanding the claimed invention, Applicant has enclosed herewith as Appendix II, drawing sketches 1-4 previously submitted with Appellant's January 5, 2000, response for explanatory purposes only.

The element numbers on sheets 1-4 correspond directly to the labeled elements of current Figs. 1-3, the latter of which constitute original subject matter which is not "new matter".

Attached Sheet 1 shows an enlarged perspective view of a portion of the conveyor belt 8 of Figs. 2 and 3 along path

A showing the trays assembled by push rod 13 according to the invention.

Attached Sheet 2 shows an enlarged perspective view of most of the elements of one assembled tray of the conveyor belt of Figs. 2 and 3 as it turns and opens beyond brake block 14.

Attached Sheet 3 shows an enlarged perspective view of most of the elements of one fully assembled tray as it moves along path B shown in Fig. 2 toward push rod 13.

Attached Sheet 4 shows the two parallel rails referenced on page 4, lines 24-28.

As made clear from Fig. 1, and attached sheets 1 and 2, elements 9 (comprising elements 2 and 3 in the order shown) make contact with each other with the assistance of push rod 13 to form horizontal and assembled trays 1 having a surface area 4 on the upper side of each assembled tray 1 and downwardly directed recesses 6 so that elements 2 and 3 (forming trays) can be supported and moved along two parallel rails (see page 4, lines 24-28 and sheet 4) extending transversely to the longitudinal direction of the trays. Thus, as indicated each assembled tray 1 is continuous and unbroken, such that the cavities 5 can hold a liquid food product that has been poured into them (while moving in path A) for freezing.

ISSUES

The issues on appeal are as follows:

1. Whether the Examiner was correct in rejecting claims 1-7 and 10-20 under 35 U.S.C. § 112, first paragraph, as containing subject matter which was not described in the specification in such a way as to enable one skilled in the art to which it pertains, on with which it is mostly nearly connected, to make and/or use the invention.

2. Whether the Examiner was corrected in rejecting claims 1-20 on the Office Action Summary.

3. Whether the Examiner was correct in failing to address the patentability of claims 8 and 9.

GROUPING OF CLAIMS

The rejection under 35 U.S.C. § 112 is limited to claims 1-7 and 10-16. Accordingly, Appellant believe that these claims as a group stand or fall together. Since claim 1 has been allowed, along with claims 2-7 and 10-20, and is generic to claims 8 and 9 which have not been rejected on any ground, Appellant submits that claims 8 and 9 do not stand or fall with claims 1-7 and 10-16 and that claims 1, 8 and 9, as a group, are separably patentable.

A R G U M E N T

With regard to issue 1 above, Appellant's position is as follows:

The Examiner's August 23, 2000, Final Office Action, is directed solely to rejections of the claims 1-7 and 10-20 under 35 U.S.C. § 112, first paragraph, as containing subject matter which was not described in the specification in such a way as to enable one skilled in the art to which it pertains, to make and/or use the invention. The Examiner supports this rejection specifically on the basis that the specification does not make clear that the individual plate elements 2 and 3 of tray 1 are hinged together so that they can fold together and apart or that elements 2 and 3 of Fig. 1 are equivalent elements.

The Examiner supports this rejection on the basis of the following statements:

> The specification is non-enabling with respect to how the individual tray 1 is incorporated into the belt conveyor 7 of Fig. 2. In particular, it is not clear that the individual plate elements 2 and 3 of the tray 1 are hinged together so that they can fold together and apart. It is not clear from the disclosure as

originally filed that the elements 2 and 3 correspond to the elements 9 that make up the conveyor belt 7, 8 of Fig. 2. The tray 1 as shown in Fig. 1 appears to depict a tray composed of individual plate elements 2 and 3 that are permanently bonded together to form a tray with pockets that hold food elements to be frozen. There is no clear disclosure from either the specification or drawings that the plate elements 2 and 3 are to be folded together and apart like an accordion."

The Examiner continues by indicating that:

"It is not all apparent from the specification that elements 2 and 3 of Fig. 1 and element 9 of Fig. 2 are equivalent elements. Lines 6 and 7 of page 4 clearly state that Fig. 2 is a side view of the belt conveyor comprising a plurality of trays "...according to Fig. 1...". This means in plain English that the trays as shown in Fig. 1 are somehow incorporated into

the belt conveyor of Fig. 2.

Furthermore, in line 35 of page 4 to line 2 of page 5, it is stated that "...the conveyor belt 8 thus may consist of...a plurality of trays 1, which are interconnected in the same manner as they elements 2 and 3 (the specification as originally filed), of which they are each made up." Here again, the specification as originally filed makes it clear that the belt conveyor of Fig. 2 is comprised of the trays 1 of Fig. 1. The fair reading of the specification at this point is that the trays 1 of Fig.1 are to be somehow incorporated into the belt conveyor of Fig. 2, and most definitely not that the elements 9 of Fig. 2 are merely equivalent structural elements of the trays 1 of Fig. 1."

Appellant respectfully traverses this rejection especially in indicating that elements 2 and 3 are "permanently bonded together" and that there is "no clear disclosure" that elements 2 and 3 are intended to be hinged together in the manner shown for the elements 9 of Fig. 2. While Applicant

agrees that the disclosure clearly provides that trays 1 make up the conveyor belt 8, this is not inconsistent with the elements of the trays being movable relative to one another. Applicant respectfully submits that the Examiner's comment that the trays are "permanently bounded together" is not accurate or supported by the specification and is directly refutable by the disclosure, including the original claims.

Applicant's position, is based in part from the following passage from the MPEP.

Section 2164 MPEP

> "...when the subject matter is not in the specification portion of the application as filed but is in the claims, the limitation in and or itself may enable one skilled in the art to make used the claim containing limitation."

Claim 1 reads as follows:

An apparatus for freezing of a food product by contacting a surface area (4; 31) of chilled tray (1), characterized in that they tray (1) consists of a plurality of elements (2, 3; 9; 22, 23), which are juxtaposed to form a surface area (4; 31), said elements being movable relative to each other to change a relative position of at least one element at a time...

Appellant notes here that the colons (;) shown in claim 1 are used as they are conventionally defined in the dictionary to separate groups of numbers referring to different things. Accordingly, for purposes of further discussion, Appellants maintains that the claim clearly separates elements 2, 3, from elements 9 (and also elements 22, 23 withdrawn from consideration as a non-elected species), and further, establishes that while elements 2, 3 may be different from elements 9 (and also 22, 23), the numbers represent <u>equivalent elements</u> and are clearly defined and claimed as such.

Claim 1 further establishes that a plurality of either elements 2, 3 or elements 9 form a surface area 4 and that each plurality of elements 2, 3 or elements 9 are movable relative to each other for changing the relative position of at least one element at a time.

Appellant further notes that claim 1 in no way is limited to "hinges" to move the elements relative to each other. This is clear as the elements noted as being movable relative to each other are shown in both the elected species of Figs. 1-3 i.e. 2, 3; 9 and the non-elected species of Figs. 4-6, i.e. elements 22, 23.

While there is nothing whatsoever in the disclosure supporting the Examiner's contention that elements 2 and 3 are bonded together there are numerous generic passages supporting

their movability set out in claim 1 and the specification inconsistent with the idea that elements 2 and 3 are bonded together. Some examples follow hereinafter:

Page 2, lines 4-6 indicates that:

"By dividing, according to the invention, the tray into a plurality of elements, which are juxtaposed and besides movable relative to each other, it will be possible to remove a frozen food product from the tray..."

The generic identification of a plurality of elements discussed above is clearly the elements of claim 1, i.e. elements 2, 3 and elements 9 (and also elements 22, 23 withdrawn from consideration).

Further, on page 2, line 30 on into page 3:

"In a preferred embodiment, the elements are elongate and, besides, the tray can advantageously be part of a conveyor belt, the longitudinal direction of the elements preferably extending transversely of the longitudinal direction of the conveyor belt. The conveyor belt thus comprises a row of successively arranged trays, which can

be connected to each other by means of their neighboring elements in the same manner as the elements in each pair of adjoining elements in a tray are connected to each other." (emphasis added)

Here again, elements discussed above clearly include at least elements 2, 3 and 9 as described in claim 1, all of which are defined as movable relative to one another.

Page 3, lines 3 and 4 further discusses "relative movability between the elements" which are clearly directed to the elements of claim 1.

Even more in point, Fig. 1 is described "as a first embodiment of a tray according to the invention" (which tray has elements movable relative to one another as indicated above) and Fig. 2 "a belt conveyor comprising a plurality of trays according to Fig. 1. The description of Figs. 1 and Fig. 2 establishes conclusively not only that the plurality of trays shown in Fig. 2 are made up of the tray of Fig. 1 but that the tray of Fig. 1 has elements 2, 3 or 9 that are movable relative to each other as shown in Fig. 2. These figures in themselves, as described, eliminate any possibility that elements 2 and 3 are bonded together.

Finally, Page 4, lines 29-35 establish that the plurality of elements 9 are interconnected by means of hinges on their longitudinal edges.

Since all the passages listed above support Appellant's contention of the equivalence of elements 2, 3 and elements 9 within claim 1, it is submitted that the skilled artisan would know without undue experimentation (or any experimentation for that matter) that elements 2 and 3 are made movable relative to each other (movability conclusively established above) by conventional structure equivalent to that described for elements 9 and as shown in Fig. 2, which as noted, describe "a belt conveyor comprising a plurality of trays according to Fig. 1."

The fact that Fig. 1 does not show the hinges in Fig. 2 does not at all, in Appellant's view, preclude the skilled artisan from providing conventional structure without the use of undue experimentation to permit the movement between elements 2 and 3 which, as noted, is conclusively called for by the claims and by the passages from the disclosure noted above.

As noted above, claim 1 does not limit producing the movement between elements 2, 3 and elements 9 to the use of hinges as suggested by the Examiner so that the elements can fold like an "accordion" (the embodiment of Figs. 4-6 withdrawn from consideration clearly has no hinges nor does it fold like

an "accordion"). Since the claims does not call for "hinges" their presence in Fig. 1 is irrelevant especially since Figs. 2 and 4-6 clearly show different means for providing movablity between the elements of claim 1 one of which are the hinges of Fig. 2. Appellant also notes that the movability between elements 22 and 23 shown in Figs. 4-6 further support the movability between elements 2 and 3 in Fig. 1 as all the elements included by element number in claim 1 are indicated to be movable relative to one another.

Further, presuming *arguendo* that the Examiner is correct in maintaining elements 2 and 3 are permanently bonded together to form a tray (not admitted, supported by the disclosure or proven), the structure will result in a nonoperative device. Since the description of Figs. 1 and 2 clearly indicates that the conveyor belt of Fig. 2 comprises a plurality of the trays of Fig. 1, there would be no way, if elements 2 and 3 were bonded together, for the elements to either move relative to themselves or around rollers 11 and 12. Accordingly, frozen food in the tray would not be dislodged at roller 12 and the stated purpose of the invention entirely frustrated. Accordingly, given the inoperative description of the invention presumed by the Examiner (without any indicated basis) and the operative description provided by the disclosure

and the comments herein, applicant submits Patent Office policy supports the operative description.

In conclusion, the disclosure establishes conclusively the equivalence of plurality of elements 2 and 3 and a plurality of elements 9 in numerous places throughout the specification, claims and drawings which the Examiner has not specifically addressed or challenged. Appellant submits that the Examiner has not construed the claims as required by § 2164.04 of the MPEP, or shown that undue experimentation by the skilled artisan is in any way necessary for enablement.

Finally, the Examiner quotes lines 35 of page 4 to line 2 of page 5 only as originally filed.

These lines now read based on submitted entry of Appellant's August 11, 1999, amendment as follows:

> "The conveyor belt 8 thus may consist of e.g. a plurality of trays 1 shown in Fig. 2 which are formed when elements 9 (which consist of elements 2 and 3 in the order shown in Fig. 1) are pressed together by push rod 13 along path A on conveyor belt 8, wherein trays 1 are interconnected in the same manner as elements 9, of which they are made up"

It is unclear to Appellant why the Examiner chooses to ignore the amended version which has a clear basis from the passages from the specification and claims cited above without introducing any new matter.

However, whether the amendments are argued to be included or not, the original language of the specification, clearly supports that elements 2 and 3 are movable relative to one another and make up the trays comprising conveyor belt 8 shown in Fig. 2 as clearly indicated from the passages cited above from the specification and from the claims.

With regard to issue 2 and 3 above, Appellant's position is as follows:

Whether or not the group of claims comprising claims 1-7 and 10-16 are unpatentable for the reasons stated by the Examiner (clearly not admitted), allowed and generic claim 1 with claims 8 and 9 are allowable as the Examiner has not rejected claims 8 and 9 on the same basis as claims 1-7 and 10-16 as containing subject matter which was not described in the specification in such a way to enable one skilled in the art to make and use the invention. Given that the features of claims 8 and 9 are enabled by the specification including Figs. 4-6, generic claim 1 is equally enabled and allowable along with claims 8 and 9.

Appellant respectfully requests that the Examiner's rejection be withdrawn and the claims allowed.

Respectfully submitted,

BROWDY AND NEIMARK, P.L.L.C.
Attorneys for Applicant(s)

By _____
Norman J. Latker
Registration No. 19,963

NJL:dr
Encl.
Telephone No.: (202) 628-5197
Facsimile No.: (202) 737-3528
F:\,A\Awap\Olsson8\PTO\breifon behalf of appellans.doc

APPENDIX I

CLAIMS

1. An apparatus for freezing of a food product by contacting a surface area (4; 31) of a chilled tray (1), characterized in that the tray (1) consists of a plurality of elements (2, 3; 9; 22, 23), which are juxtaposed to form a surface area (4; 31), said elements being movable relative to each other to change a relative position of at least one element at a time and each element occupying such a small surface in the surface area (4; 31) that the change of the relative position is possible after freezing of the food product contacting the tray.

2. An apparatus as claimed in claim 1, characterized in that the surface area (4) of the tray (1) is essentially horizontal during freezing of the food product.

3. An apparatus as claimed in claim 1, characterized in that the elements (9; 22, 23) form a flat surface area.

4. An apparatus as claimed in claim 2, characterized in that the elements (2, 3) form a surface area (4) which comprises a plurality of open cavities (5) for receiving a semiliquid or liquid food product.

5. An apparatus as claimed in claim 1, characterized in that the elements (2, 3; 9; 22, 23) are enlongate.

6. An apparatus as claimed in claim 1, characterized in that the elements (2, 3; 9; 22, 23) are parts of a conveyor belt (8).

7. An apparatus as claimed in claim 1, characterized in that the change of the relative position of the elements (9) is a turning.

8. An apparatus as claimed in claim 1, characterized in that the change of the relative position of the elements is a translation perpendicular to a plane extending essentially in parallel with the surface area.

9. An apparatus as claimed in claim 1, characterized in that the change of the relative position of the elements (22, 23) is a translation in a plane extending essentially in parallel with the surface area.

10. An apparatus as claimed in claim 1, characterized in that the tray (4) on the side opposite to the side contacting the food product is chilled by intensified blowing of cold air.

11. An apparatus as claimed in claim 2, characterized in that the elements (9; 22, 23) form a flat surface area.

12. An apparatus as claimed in claim 11, characterized in that the elements (2, 3; 9; 22, 23) are parts of a conveyor belt (8).

13. An apparatus as claimed in claim 3, characterized in that the elements (2, 3; 9; 22, 23) are parts of a conveyor belt (8).

14. An apparatus as claimed in claim 2, characterized in that the elements (2, 3; 9; 22, 23) are parts of a conveyor belt (8).

15. An apparatus as claimed in claim 14, characterized in that the tray (4) on the side opposite to the side contacting the food product is chilled by intensified blowing of cold air.

16. An apparatus as claimed in claim 13, characterized in that the tray (4) on the side opposite to the side contacting the food product is chilled by intensified blowing of cold air.

17. An apparatus as claimed in claim 9, characterized in that the tray (4) on the side opposite to the side contacting the food product is chilled by intensified blowing of cold air.

18. An apparatus as claimed in claim 8, characterized in that the tray (4) on the side opposite to the side contacting the food product is chilled by intensified blowing of cold air.

19. An apparatus as claimed in claim 7, characterized in that the tray (4) on the side opposite to the side contacting

the food product is chilled by intensified blowing of cold air.

20. An apparatus as claimed in claim 4, characterized in that the tray (4) on the side opposite to the side contacting the food product is chilled by intensified blowing of cold air.

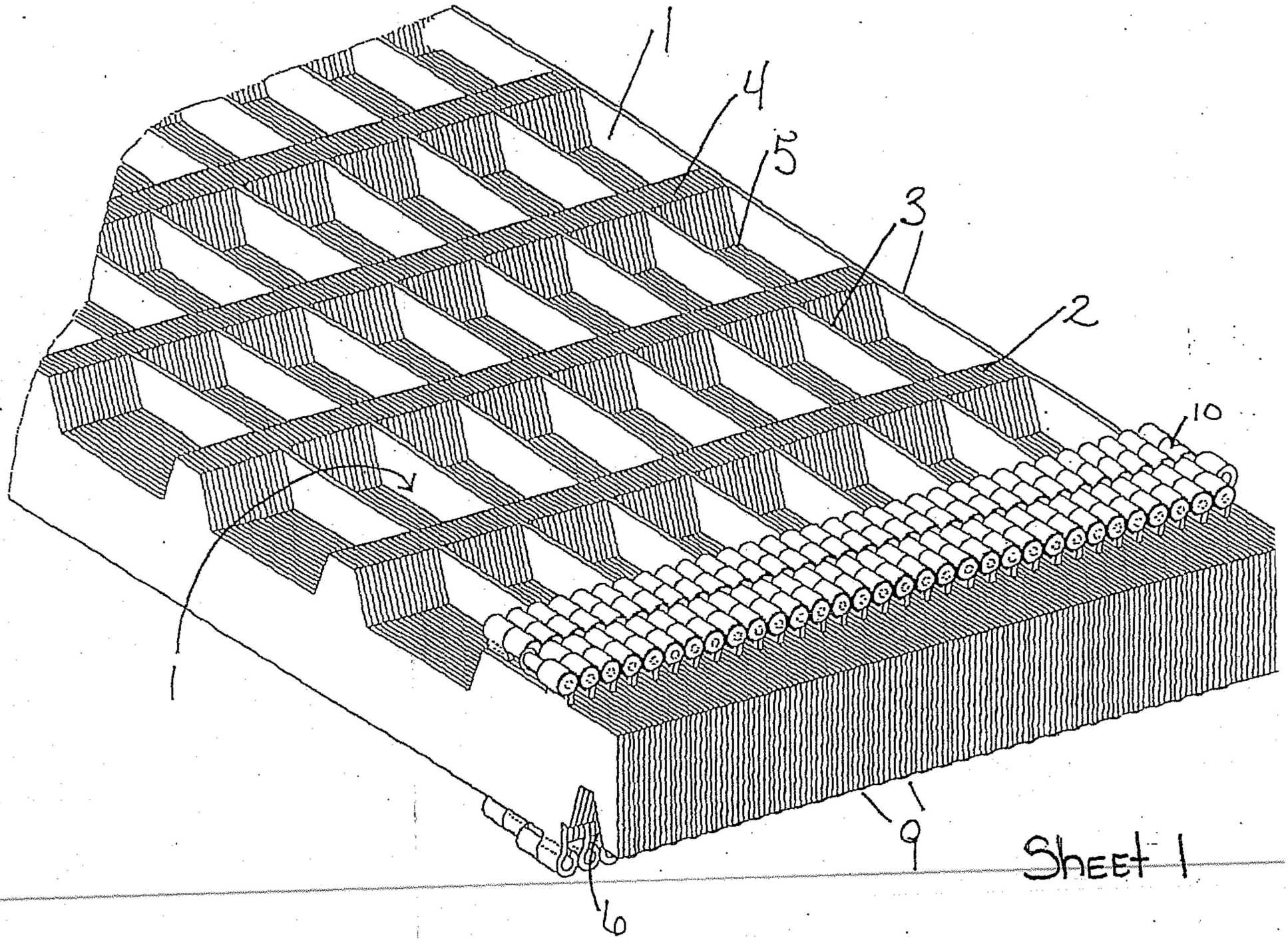

Sheet 1

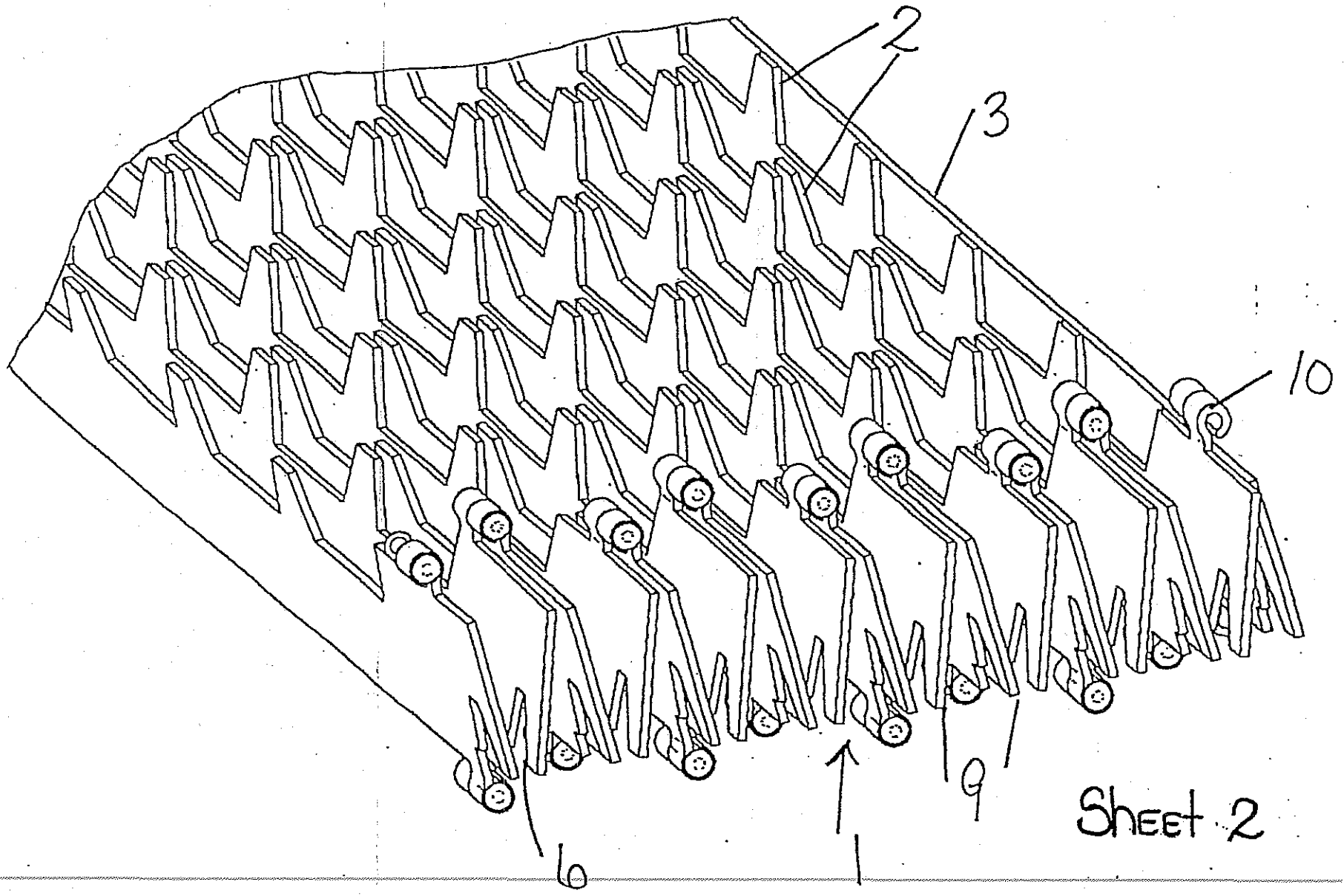

Sheet 2

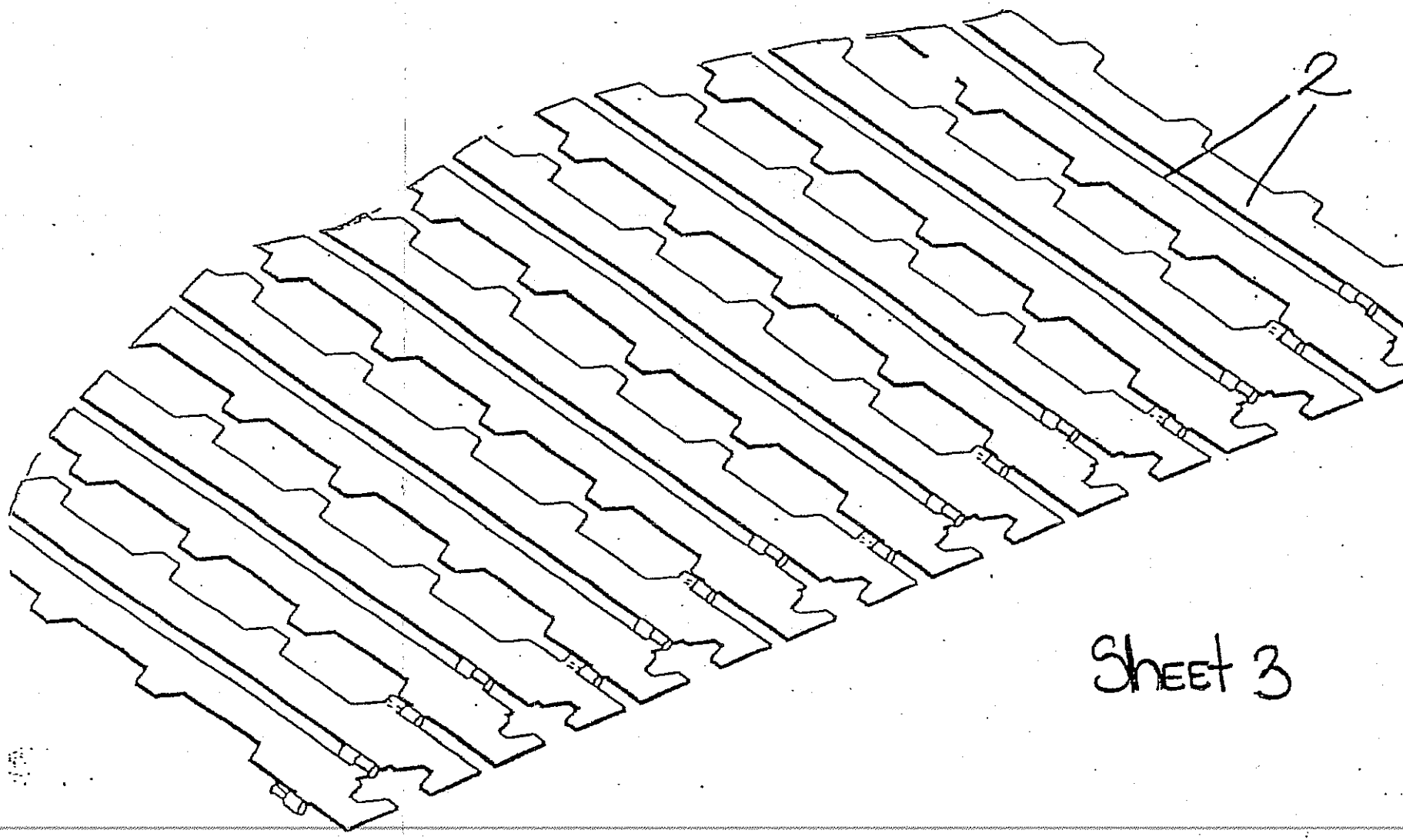

Sheet 3

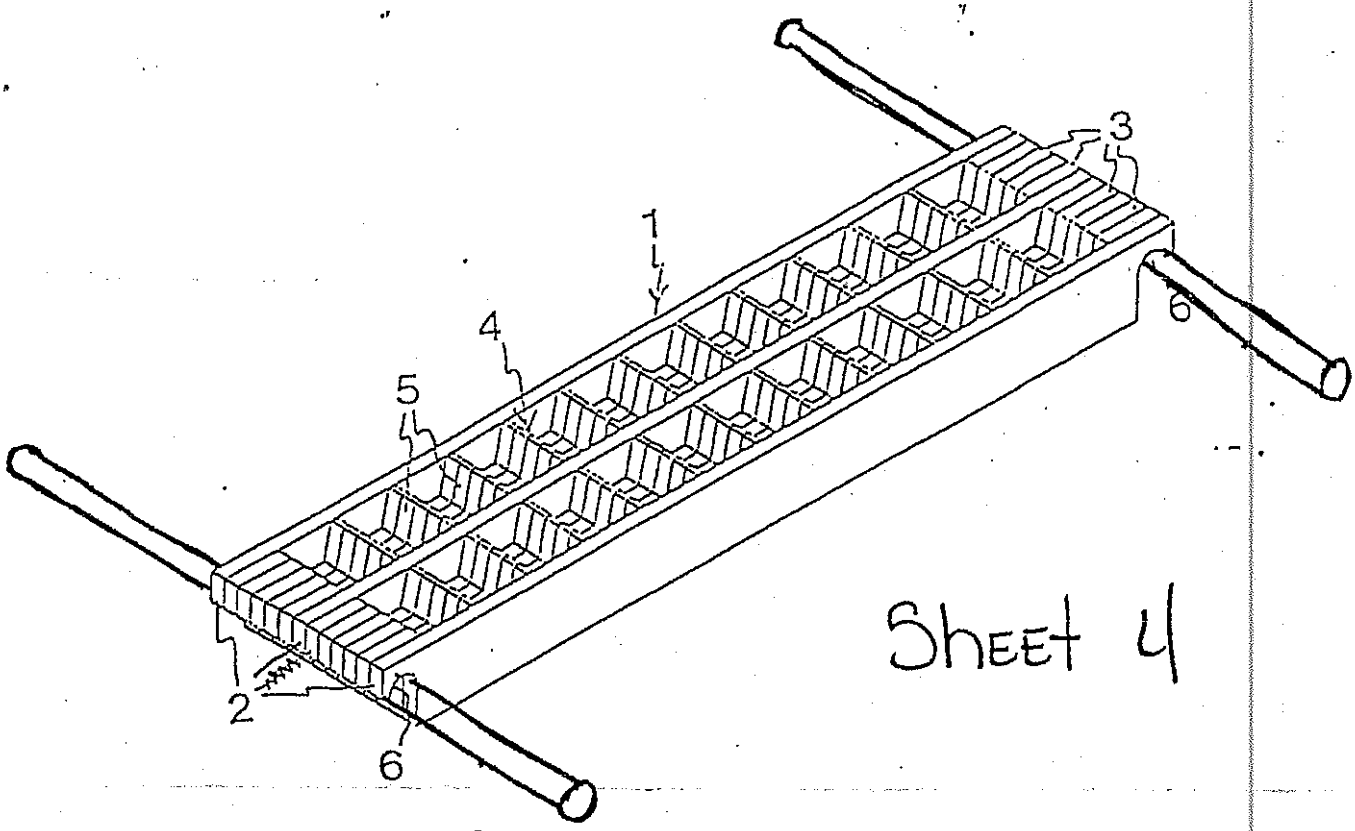

Sheet 4