COPY

US005897168A

# United States Patent [19]

**Bartelt et al.**

[11] **Patent Number: 5,897,168**

[45] **Date of Patent: Apr. 27, 1999**

[54] **VEHICLE SEAT FRAME**

[75] Inventors: **Regina Bartelt**, Buisburg; **Martin Strenger**, Bochum; **Hubert Wissdorf**, Rommerskirchen; **Martin Zynda**, Remsheid; **Thomas Domehl**, Bolanden, all of Germany

[73] Assignee: **Johnson Controls Technology Company**, Plymouth, Mich.

[21] Appl. No.: **08/981,858**

[22] PCT Filed: **Jul. 26, 1996**

[86] PCT No.: **PCT/US96/12349**

§ 371 Date: **Apr. 20, 1998**

§ 102(e) Date: **Apr. 20, 1998**

[87] PCT Pub. No.: **WO97/04689**

PCT Pub. Date: **Feb. 13, 1997**

[30] **Foreign Application Priority Data**

Jul. 28, 1995 [DE] Germany ..... 19527470

[51] **Int. Cl.**[6] ..... **A47C 7/40**

[52] **U.S. Cl.** ..... **297/452.18**; 29/897.2

[58] **Field of Search** ..... 297/216.1, 216.13, 297/452.1, 452.18; 29/527.5, 897.2

[56] **References Cited**

U.S. PATENT DOCUMENTS

| | | | |
|---|---|---|---|
| 4,544,204 | 10/1985 | Schmale | 297/452.18 |
| 4,585,273 | 4/1986 | Higgs et al. | |
| 4,624,503 | 11/1986 | Kazunori | |
| 4,695,097 | 9/1987 | Muraishi | 297/452.18 |
| 5,567,017 | 10/1996 | Bourgeois et al. | 297/452.18 X |
| 5,636,901 | 6/1997 | Grilliot et al. | 297/452.18 |

*Primary Examiner*—Peter R. Brown
*Attorney, Agent, or Firm*—Harness, Dickey & Pierce, P.L.C.

[57] **ABSTRACT**

A frame of a backrest or a seat made of metal for a motor vehicle seat can be produced from magnesium in a single operation. The frame employs a design which uses a Z-shaped profile as its basic geometry and is produced as a magnesium die casting.

**12 Claims, 1 Drawing Sheet**

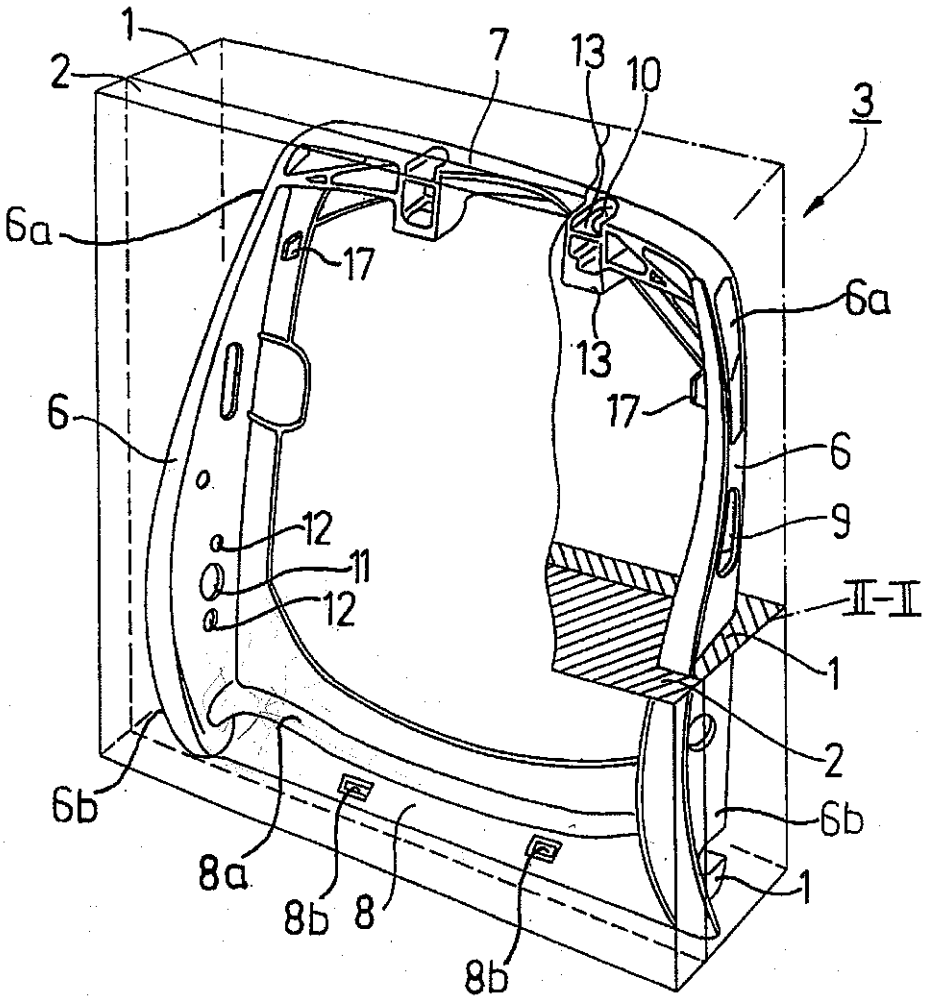

PATENT SERVICE CORPORATION

International Patent & Trademark Agents

K. Yamada
M. Gocho (Overseas Sec.)
H. Iwai (Overseas Sec.)
T. Hosokawa

A. Takahashi
K. Takei
A. Mizushiri

Baba Building 3rd Floor
12-10, Takadanobaba 4-Chome
Shinjuku-ku, Tokyo, 160
JAPAN

Telephone : (03)362-5461
Facsimile : (03)362-5950

Counsel
S. Em:
I. Murase
K. Sato

RECEIVED
JUN 26 2000
BROWDY AND NEIMARK

June 21, 2000

BROWDY AND NEIMARK, P.L.L.C.
Suite 300
624 Ninth Street, N.W.
Washington, D.C. 20001-5303
U. S. A.
Attn: Mr. Norman J. Latker

Our Ref: Infg.US.200(SF)

URGENT

Re: Infringement and Invalidation Study and Opinion
In re: U.S. Pat. No. 5897168 vs. Our Clients ' Invention

Dear Mr. Latker:

We are writing to you, as Mr. Roger L. Browdy is not available, requesting that you please IMMEDIATELY attend to preparing an expertise careful judgement and opinion about the infringeability of our clients' invention upon the U.S. Pat. No. 5897168 and the prospect for invalidating such U.S. patent. This U.S. patent is now under dispute, as discussed later. We would appreciate receiving your best opinion letter, **firstly VIA FAX**, before July 22, 2000, and secondly receiving the original one via SPECIAL AIR COURIER before July 27, 2000. Thank you for your immediate cooperation for insuring such arrival.

Enclosed herewith are the following materials for your study and analysis:

- Description on our clients' invention (die-cast seat back frame and seat cushion frame) with drawings, as marked "A".

- A copy of patent specification of the U.S. Patent No. 5897168 in question, as marked "X".

- Relevant prior-art references:

  a) a copy of U.S. Patent No. 4673215, as marked "B"
  b) a copy of U.S. Patent No. 5328248, as marked "C"
  c) a copy of Japanese U.M. Pub No. 57-81662, as marked "D" along with the English translation thereof.

Hereinafter, our clients' invention shall be referred to as " invention "A" ", and the U.S. Pat. No. 5897168 as " USP168". Regarding the references, the U.S. Pat. Nos. 4673215 and 5328248 be referred as "USP215" and "USP248", respectively, and the Japanese publication as "JP662".

Cont'd.../

The following two points are our major concerns:

(1) Infringeability of our clients' invention "A" on the USP168

Please determine whether the invention "A" may be infringed on the claims 1, 2, 5, 6, 9, 11 and 12 of the USP168, or not. This is a first concern of our clients'.

(2) Invalidation possibility of the USP168

Is it possible to invalidate all the claims of the USP168 by relying on the foregoing three references USP215, USP248 and JP662 ? Our clients wish to know a firm basis for invalidation of the USP168.

Our opinions regarding the USP168

We will set forth our opinions for all the claims of USP168 in sequences as below.

1) Claim 1

We would fear that the invention "A" seems to be structurally identical to the Claim 1, except that the central web (1a) of lateral frame section (1) is inclined outwardly as shown in Figs. 1 (b) and 1 (c). Please advise whether the invention "A" will infringe on this Claim 1 or not.

On the other hand, we are of the opinion that the Claim 1 can be invalidated by showing the combination of the USP215 and USP248. What is your own opinion about that ?

2) Claim 2

We would fear that the lower crossbar section (3) of invention "A" seems to be identical to the lower tie-rod (8) claimed in the Claim 2. However, the illustrated configuration of such lower die-rod (8) is in the form of a widely expanded flat plate, in contrast to the lower crossbar section (3) having a relatively narrow band shape.

Cont'd.../

On the other hand, the Claim 2 can be invalidated by the USP248, we suppose.

3) Claims 3 and 4

Since the framework of invention "A" does not include any cover (8a) for transfer rod and any upholstery hooks (16), we are of the opinion that the invention "A" does not infringe on those claims 3 and 4. Also, we expect that the combination of the USP215 and USP248 will invalidate the claims 3 and 4.

4) Claim 5

The invention "A" has a thickened part (1c-1 or 1c-2) formed at the edge of flange portion (1b). The thickened part is of course of a large thickness relative to the flange and web portions (1b ) (1a), which we believe would be different from the lip (4a) stated in the Claim 5 and thus a basis for avoiding infringement on the Claim 5. Also, we expect that the USP248 can be used as a material for invalidation of the same Claim 5.— YES

5) Claim 6

We would admit that the invention "A" includes plural apertures (4h, 3h), as descried therein, which can correspond to those (11, 12) described in this Claim 6, and thus there may exit an infringement on that claim. But, we presume that the Claim 6 might be invalidated by showing the combination of USP248 and JP662.

6) Claims 7 and 8

Apparently, the invention "A" has no identical structure to the specific parts (17) in the side pieces as claimed in the Claims 7 and 8. Hence, we believe that any infringement could not be established in that regard. But, we expect that those two claims can be invalidated by the USP248.

Cont'd.../

7) Claim 9

The invention "A" includes a pair of headrest stay guide portions (5) integrally formed in the upper crossbar section (2). Each of the headrest stay guide portions (5) is formed with an upper guide recession (2a) and a lower guide recession (2b). This construction might be identical to what is described in the Claim 9, which we can admit would comprise an infringement on that claim. But, invalidation of Claim 9 can be made by showing the JP662, we suppose, because the headrest stay support structure described in the JP662 in conjunction with Figs. 1 and 2 is considered identical to that defined in the Claim 9 in terms of structure. However, the whole frame of JP662 is formed integrally from a synthetic resin material, which is a different aspect from the magnesium die-cast frame of USP168, though.

8) Claim 10

The invention "A" has a pair of upper and lower casting sprues (6) (7). As seen from the drawings, the upper casting sprue (6) is disposed in the central point of upper crossbar section (2) whereas the lower casting sprue (7) disposed in the central point of lower cross bar section (3). This vertical central arrangement is different from the locations of casting sprues as defined in the Claim 10. Such casting sprue is described as being designated by (18) which however can not be found in the drawings of USP168. Our opinion is therefore that any infringement will not be comprised in this respect. We also presume that the Claim 10 can be invalidated by both USP215 and USP248. What is your opinion ?

? (18) in drawings

9) Claims 11 and 12

We fear that the invention "A" seem identical to what are defined in those method claims 11 and 12. Thus, infringeability of the invention "A" may possibly be comprised in this particular aspect upon those two claims. But, invalidation of both claims 11 and 12 can be made on the basis of the USP248. What is your opinion on those points.

Cont'd.../

We would like you to carefully study the above-noted points as well as the attached documents. You may present any explicit, honest opinions if you have any other effective suggestions or possible breakthrough to the contrary, after reviewing each of our opinions. As usual, this opinion should be duly prepared in the privileged confidential statement form. We expect your excellent analysis and keen opinion on this matter for the sake of our clients' important rights. At the same time, we welcome your honest opinion for determining the infringeability points of the invention "A" and a prospect for success in invalidating the USP168 in question.

On this case also, we are strongly asked by our clients to maintain your total charges within US$ 4,000.00. Thus, you kind coopration to limit your total charges not above U$ 4,000.00. **while keeping your high quality works** will be highly appreciated, in view of our many new cases and long good business relation as well as for the sake of our clients.

If you have any inquiry on this matter, please immediately BY FAX let us know.

We look forward to your valuable opinion **firstly VIA FAX BEFORE JULY 22, 2000,** and secondly via SEPCIAL AIR COURIER before July 27, 2000.

With best regards,

Please Confirm
BY RETURN FAX

Yours very truly,

M. Gocho, Director,
Overseas Section

MG/rs:OS.PASCO
Encls.

(A)

## Description of Our Clients' Invention

Figs. 1 (a) through 1 (g) illustrates a seat back frame (SB) of an automotive seat. Figs. 2 (a) to 2 (c) illustrates a seat cushion frame (SC) of the automotive seat. Each of the seat back and cushion frames (SB) (SC) is formed by die casting from a magnesium alloy into a single integral body in the shown configuration.

### Brief Description of the Drawings

Fig. 1 (a) is a schematic perspective view of a seat back frame (SB).

Fig. 1 (b) is a sectional view taken along the line A - A in Fig. 1 (a).

Fig. 1 (c) is a sectional view taken along the line B - B in Fig. 1 (a).

Fig. 1 (d) is a sectional view taken along the line C - C in Fig. 1 (a), which also shows a lateral slide die (8).

Fig. 1 (e) is a sectional view taken along the line D - D in Fig. 1 (a).

Fig. 1 (f) is a partly broken perspective view showing a headrest stay guide portion (5) formed in the upper crossbar section (2).

Fig. 1 (g) is a sectinal view taken along the line E - E in Fig. 1 (f).

Fig. 2 (a) is a schematic perspective view of a seat cushion frame (SB).

Fig. 2 (b) is a sectional view taken along the line A - A in Fig 2 (a).

Fig. 2 (c) is a sectional view taken along the line B - B in Fig. 2 (a).

While not shown, both seat back and cushion frames (SB) (SC) are formed, using upper and lower casting dies by one single operation. They are each die cast into one integral body, except for such separate fittings as spring retainers (9) and reclining device (16).

The seat back frame (SB) is comprised of a pair of spaced-apart lateral frame sections (1) (1), an upper crossbar section (2) and a lower crossbar section (3), all of them being formed integarlly together by die casting as stated above. As shown, the

upper crossbar section (2) itself forms a complete integral upper part of the frame (SB), whereas on the other hand, the lower crossbar section (3) is formed in a generally rectinear band shape and integrally extended between the two lower end portions respectively of two lateral frame sections (1).

Each lateral frame section (1) has a generally Z profile or cross-section, as shown in Figs. 1(b) - 1(d), which includes: a center web portion (1a); a pair of flange portions (1b)(1b), each extending from the center web portion (1a) in a direction opposite to each other; and a pair of first and second thickened portions (1c-1)(1c-2) each being formed in the respective distal ends of the two flange portions (1b). It is noted here that, as shown, the center web portion (1a) is inclined in the direction outwardly of the frame, and that the first and second thickened portions (1c-1)(1c-2) extend from their respective flange portions (1b) in a direction toward each other. Designations (11) denote plural holes in which spring retainers (9) are respectively inserted as seen in Fig. 1(c). Plural support springs (e.g. zig-zag spirngs) are extended between the two lateral frame sections (1) and retained there by egaging their ends over such spring retainers (9), thereby serving the purpose to resiliently support the back of a passenger.

Defined in the upper crossbar section (2) are a pair of headrest stay guide portions (5)(5), each having upper and lower guide recessions (2a)(2b), wherein there are thus defined two support regions (2a-1)(2b-1), in each of which, through-holes (2c )(2c) are formed in a coaxally alligned manner, as shown in Figs. 1(f) and 1(g). As indicated in Fig. 1(g), a headrest stay may be inserted through both two trhough-hoes (2c) in order for a headrest body (not shown) to be securely supported on the seat back frame (1).

As shown in Fig. 1(e), a casting sprue (6) is formed midway (central point) in the upper crossbar section (2). On the other hand, another casting sprue (7) is formed midway in the lower crossbar section (3), as in Fig. 1. Hence, both two sprues (6)(7) are arranged on the same vertical central line of the frame (1).

Designations (4)(4) represent a pair of securing areas to which are fixedly secured a corresponding pair of reclining devices (see the one (16) in Fig. 2(a) for instace)

having an operative connection between the seat back and cushion frames (SB) (SC).

Each securing area (4) has a plural apertures (4h) by way of which the reclining device and other fitting members may be connected as by securing bolts and nuts to the seat back frame (1). As understandable from Fig. 1 (d), those apertures (4h) are formed in the securing area (4) by means of a suitable lateral slide die (8).

Referring now to Figs. 2 (a) to 2 (c), there is illustrated a seat cushion frame (SC) which is also formed by die casting from a manensium alloy, comprising a pair of lateral frame sections (10) and a pair of crossbar sections (12) in an integral manner.

As can be seen from Figs. 2 (b) and 2 (c), each of the lateral frame sections (10) is composed of a center web portion (10a) and a pair of first and second flange portions (10b-1) (10b-2). While those two flange portions extend from the center web portion (10a) in a direction opposite to each other, the second flange portion (10b-2) is of a generally " ⌐ " configuration in the cross-section, including two horizontal flange regions defined inwardly of the frame (SC).

A pair of securing areas (13) are defined in the respective ends of the two lateral frame sections (10). As similar to the seat back frame (SB), formed in each secuirng area (13) are plural apertures (13h) by way of which the reclining device (16) and other fitting members may be connected as by securing bolts and nuts to the seat cushion frame (SC). Of course, those apertures (13h) are formed by means of a suitable lateral slide die, like the one (8) shown in Fig. 1 (d).

Designations (10h) denote plural spring retaining apertures. As indicated in Fig. 2 (c), the end of each spring (e.g. zig-zag spring) is securely engaged in each of those apertures (10h), so that plrual springs may be extended between the two lateral frame sectioins (10) to resiliently support the buttoks portion of a passenger.

FIG. 1 (a)

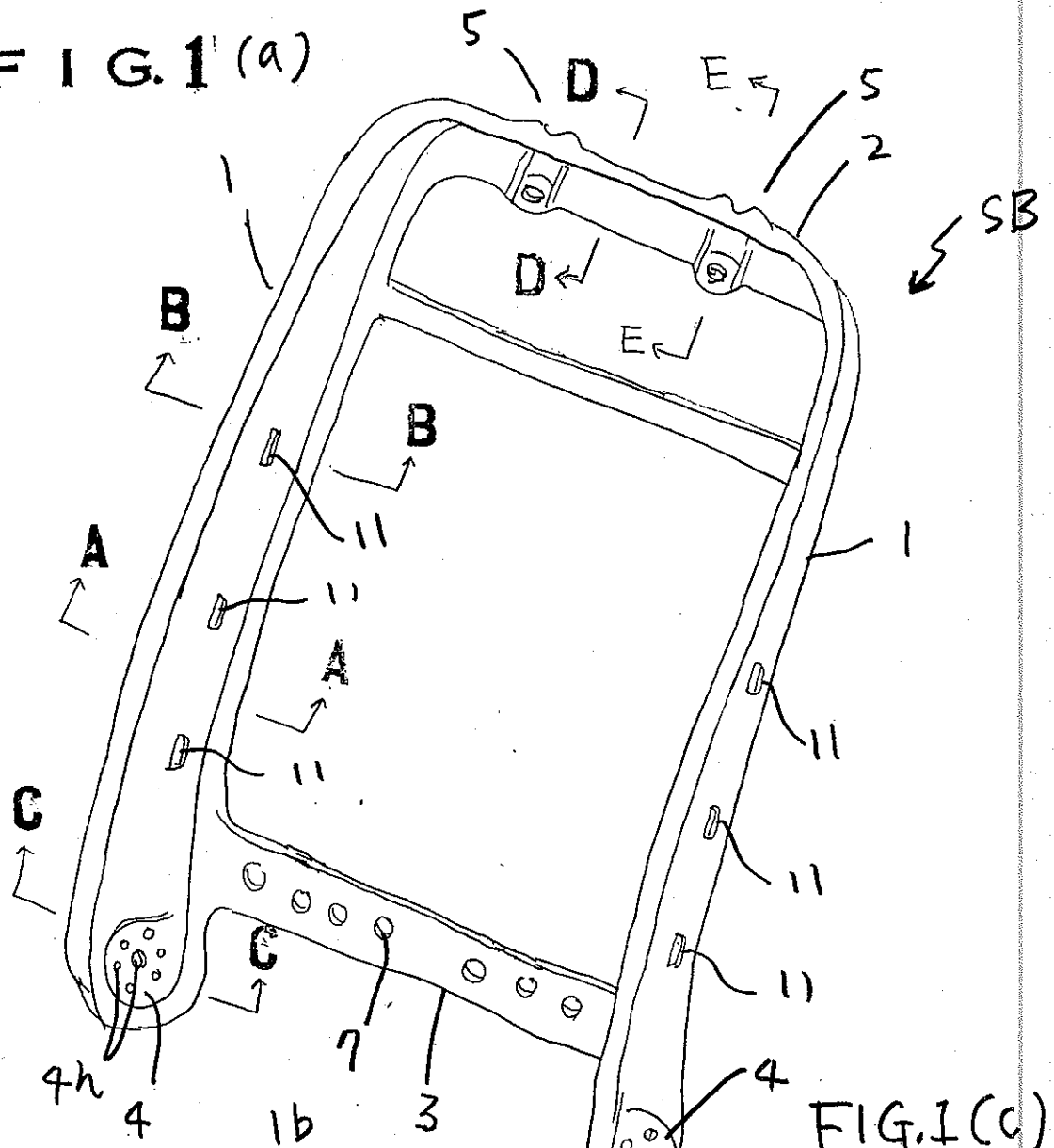


FIG. 1 (b)

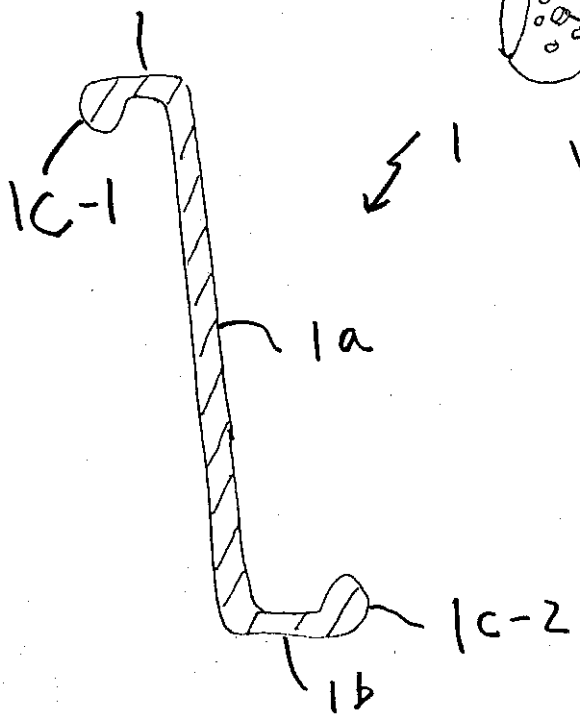


FIG. 1 (c)

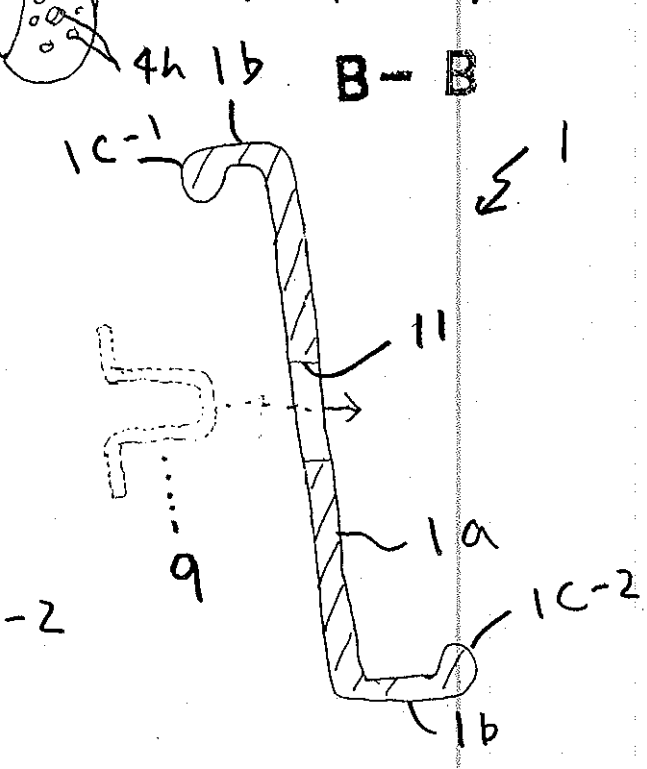

C- C FIG.1(d)

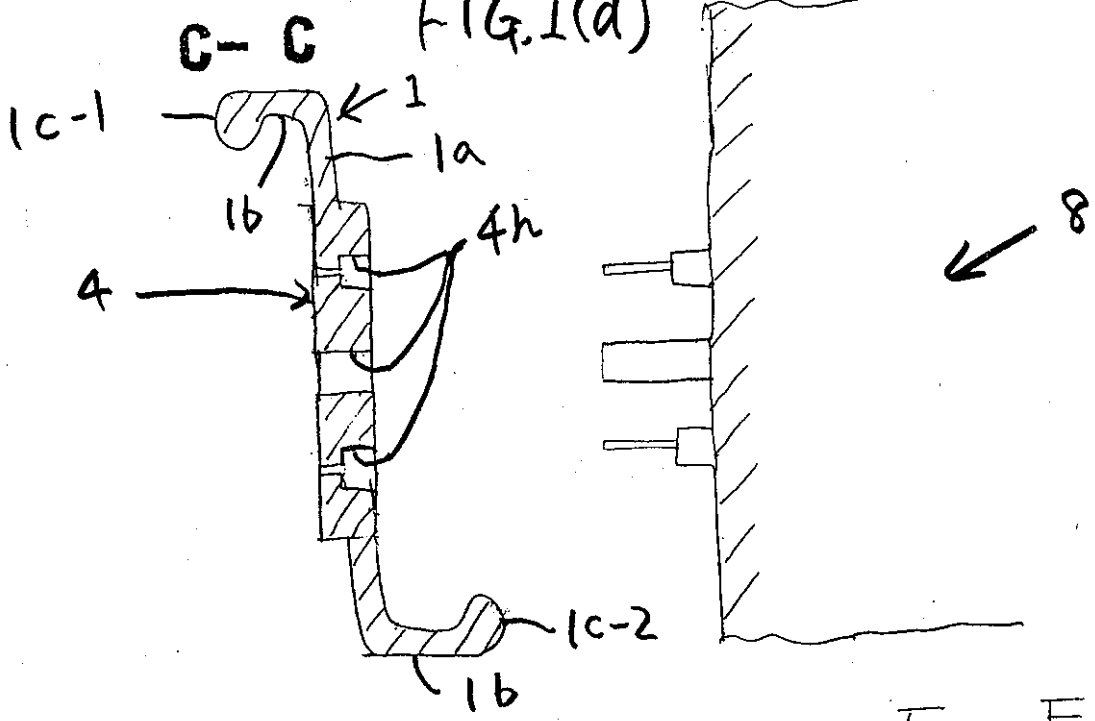


E — E

FIG.1(e) D- D

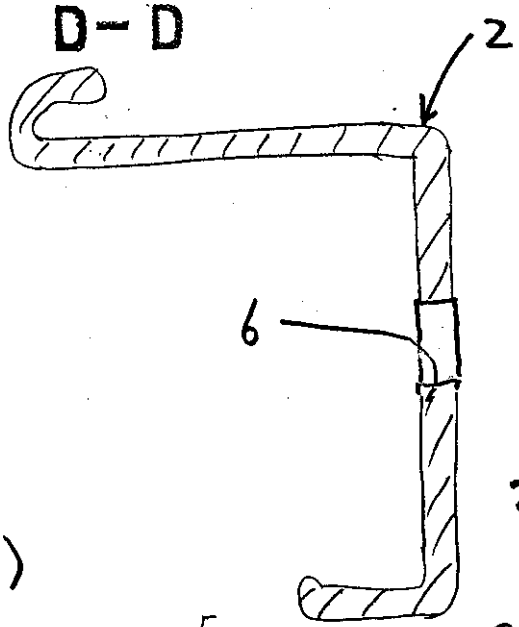


FIG.1(f)




FIG.1(g)

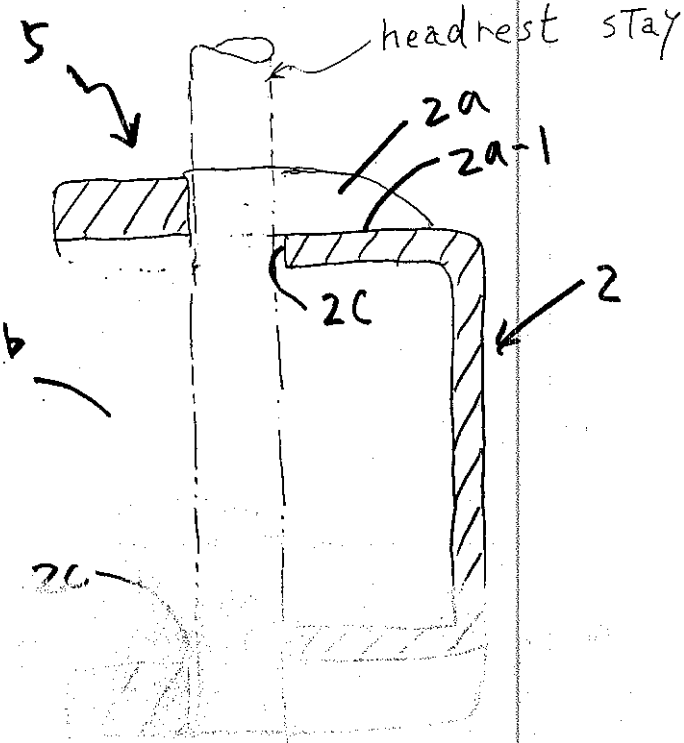

FIG.2(a)

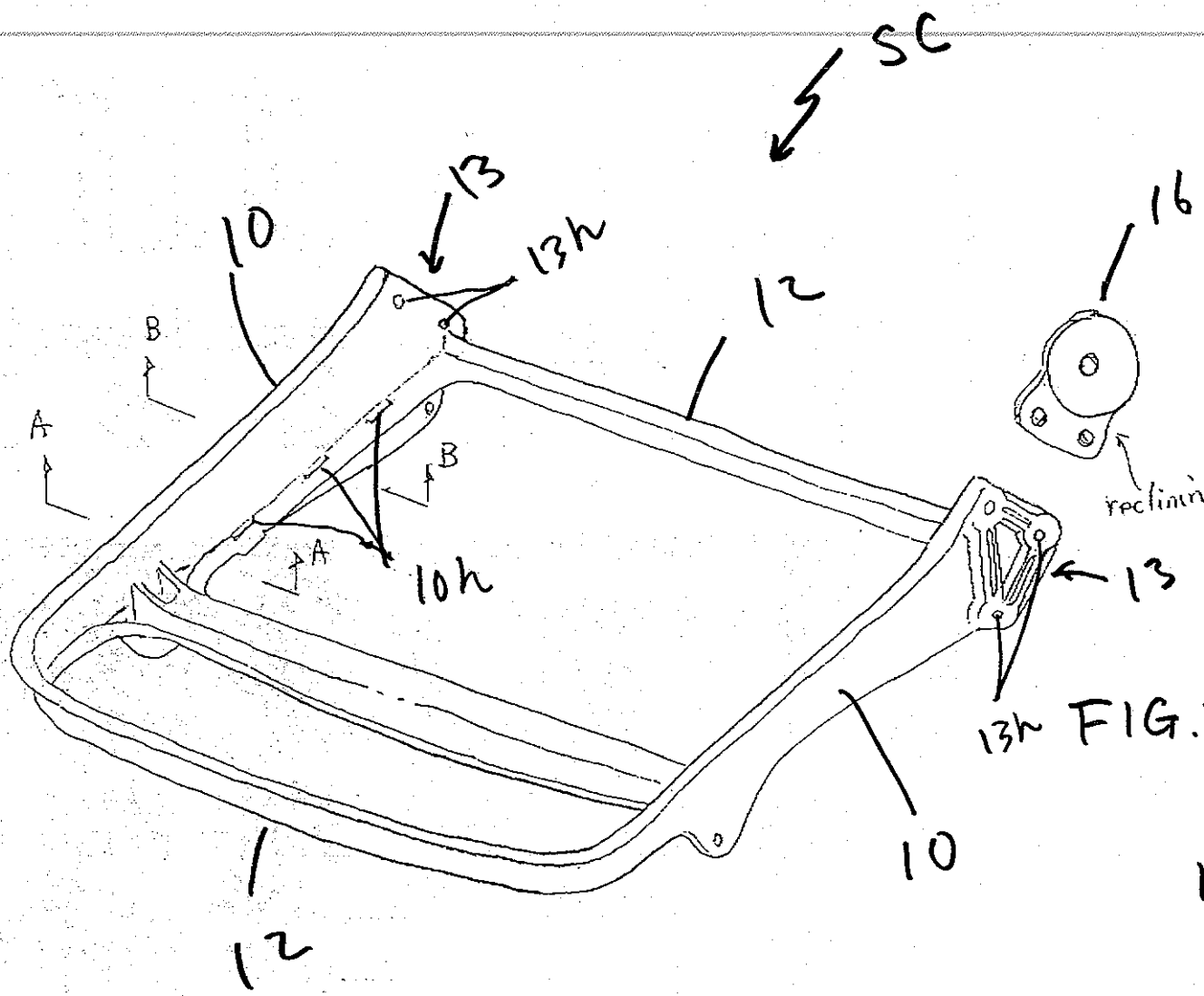


FIG.2(b)

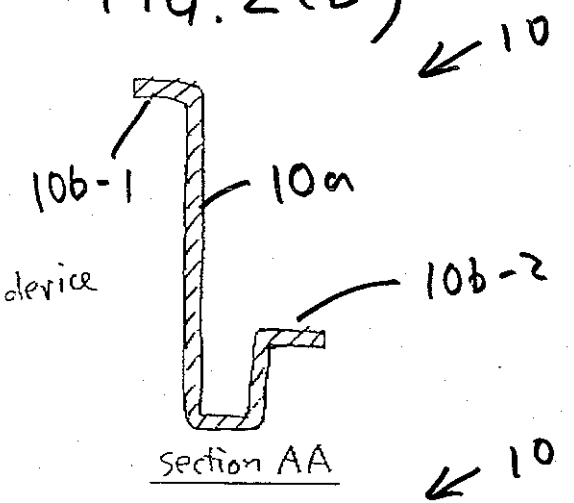


FIG.2(c)

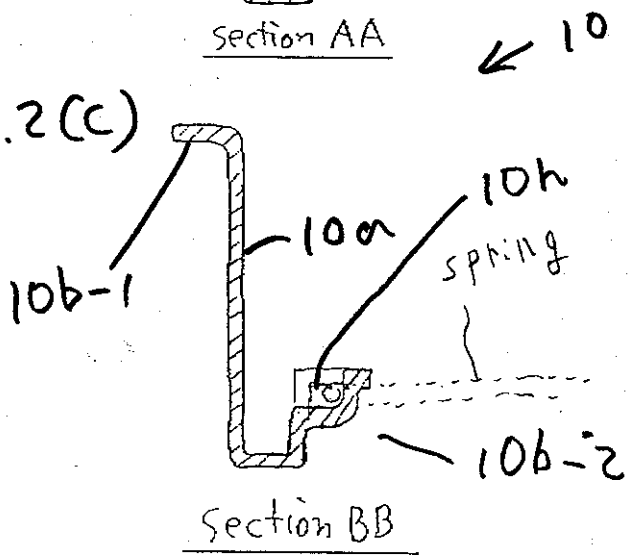

US005897168A

# United States Patent [19]

Bartelt et al.

[11] Patent Number: 5,897,168

[45] Date of Patent: Apr. 27, 1999

[54] VEHICLE SEAT FRAME

[75] Inventors: Regina Bartelt, Buisburg; Martin Strenger, Bochum; Hubert Wissdorf, Rommerskirchen; Martin Zynda, Remsheid; Thomas Domebl, Bolanden, all of Germany

[73] Assignee: Johnson Controls Technology Company, Plymouth, Mich.

[21] Appl. No.: 08/981,858

[22] PCT Filed: Jul. 26, 1996

[86] PCT No.: PCT/US96/12349

§ 371 Date: Apr. 20, 1998

§ 102(e) Date: Apr. 20, 1998

[87] PCT Pub. No.: WO97/04689

PCT Pub. Date: Feb. 13, 1997

[30] Foreign Application Priority Data

Jul. 28, 1995 [DE] Germany ..... 19527470

[51] Int. Cl.[6] ..... A47C 7/40

[52] U.S. Cl. ..... 297/452.18; 29/897.2

[58] Field of Search ..... 297/216.1, 216.13, 297/452.1, 452.18; 29/527.5, 897.2

[56] References Cited

U.S. PATENT DOCUMENTS

| | | | |
|---|---|---|---|
| 4,544,204 | 10/1985 | Schmale | 297/452.18 |
| 4,585,273 | 4/1986 | Higgs et al. . | |
| 4,624,503 | 11/1986 | Kazunori . | |
| 4,695,097 | 9/1987 | Muraishi | 297/452.18 |
| 5,567,017 | 10/1996 | Bourgeois et al. | 297/452.18 X |
| 5,636,901 | 6/1997 | Grilliot et al. | 297/452.18 |

*Primary Examiner*—Peter R. Brown

*Attorney, Agent, or Firm*—Harness, Dickey & Pierce, P.L.C.

[57] ABSTRACT

A frame of a backrest or a seat made of metal for a motor vehicle seat can be produced from magnesium in a single operation. The frame employs a design which uses a Z-shaped profile as its basic geometry and is produced as a magnesium die casting.

12 Claims, 1 Drawing Sheet

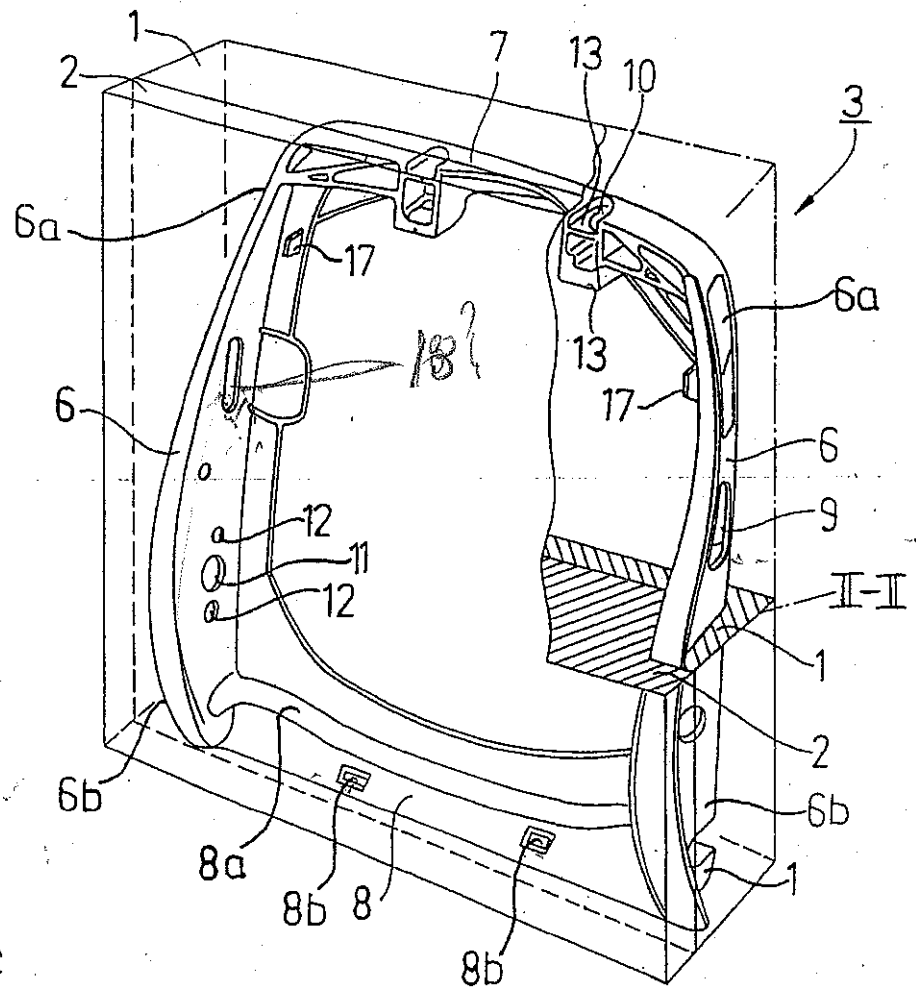

Fig. 1

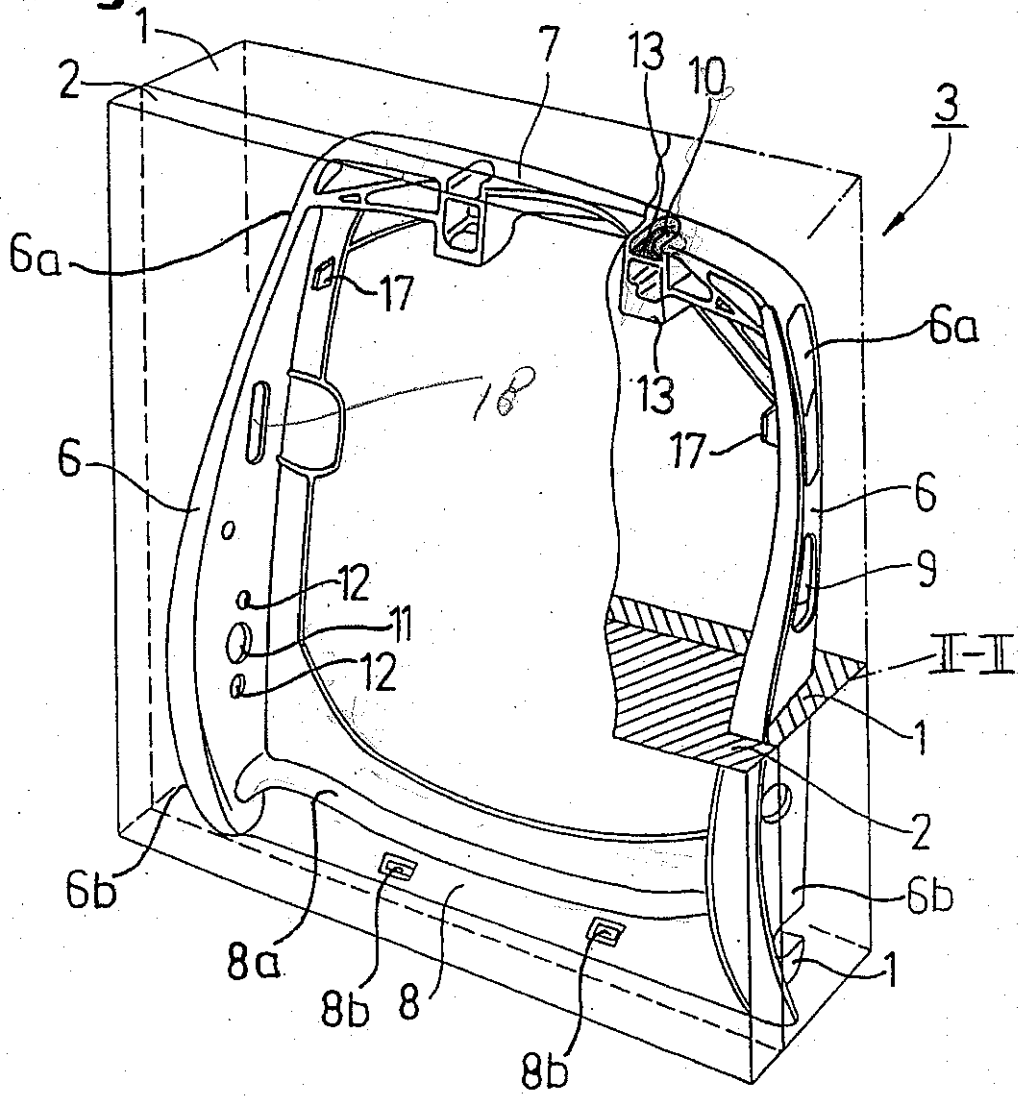
1
2
7
13
10
3
6a
17
18
13
6a
17
6
6
9
12
11
12
II-II
1
2
6b
6b
8a
8b
8
8b
1

Fig. 2

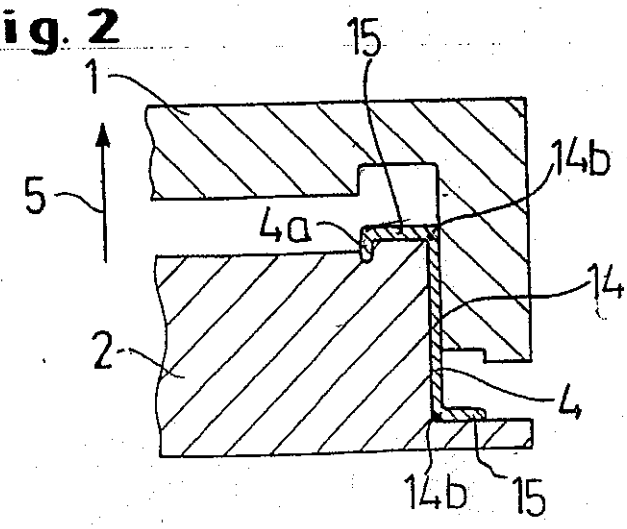
15
1
14b
5
4a
14
2
4
14b
15

# VEHICLE SEAT FRAME

## BACKGROUND OF THE INVENTION

1. Field of the Invention

The invention concerns a frame of a back-rest or seat made of metal for the seat of a motor vehicle. It further concerns a process for the manufacture of the frame.

2. Description of the Prior Art

In the manufacture of automobiles magnesium alloys are used because of their low specific gravity and their strength. Among the alloys, which consist essentially of magnesium, the so-called "electron metals" (or "Dow metals") may be worth considering; these are alloys consisting of 90% or more magnesium with—depending on the application additions of, for example, aluminum, zinc, manganese, copper or silicon, which are, in contrast to aluminum, insensitive to alkaline solutions, and which make weight savings of 80% as compared to iron possible, and even in comparison with aluminum alloys, such as Duralumin, weight savings of 20 to 40% are possible. By means of pickling them in a nitric acid containing alkaline dichromate bath, the electron metals can be given a coating, which protects them against being attacked by the atmosphere. Alloys of 98% magnesium and 2% manganese are practically permanently resistant to water.

In particular, the magnesium alloys with a high proportion of magnesium seem, therefore, to be predestined for the manufacture of vehicles, if weight savings combined with high mechanical strength are being desired. A problem in the application of magnesium for the production of the complicated support structures or frames of motor vehicle seats consists in the fact that magnesium cannot be spot welded. Therefore, if need be, only screws or rivets can be basically considered for the purpose of joining magnesium. The complicated core-containing dies, which are known from the support structure designs used for designing with steel, not only increase the cost of the dies, but generally also require substantial subsequent machining. Because in contrast to iron or steel profiles, cast magnesium profiles cannot be bent, the C-profiles typical for steel cannot be produced without complicated die work and efforts for removing parts from the dies, as well as with subsequent machining. But because the mechanical strength or the material hardness of magnesium and the alloys with a high proportion of magnesium is below that of steel, it is necessary in the case of the otherwise desirable substitution of magnesium for steel, to compensate for the reduced strength of the material, among other things, by the choice of the shape of the magnesium profile.

The invention is based on the problem of generating a magnesium profile for the support structure of a motor vehicle seat or the back rest pertaining to it, which can be die cast in one work process in such a way that not only the cost of the die used, but also the cost of removal from the die and of any possible subsequent machining are to be minimal.

The solution in accordance with the invention consists for support structure of the initially referred to type is that it be made according to a design—i.e. a structural assembly—which has a Z-profile as its basic geometry and consists of a magnesium die casting. According to a further aspect of the invention, the design is laid out for a magnesium die casting tool functioning in accordance with the "waffle iron principle". In a process according to the invention for the manufacture of a support structure, it is die cast in a single operation in a die according to the waffle iron principle, in which process preferably a die without a core is used.



Improvements and further embodiments will be shown in the subordinate claims.

By virtue of the invention it is being achieved that the magnesium die cast part produced can be easily, that is to say by simply pulling an upper and a lower die apart, removed from the die. Subsequent machining is generally only needed at special locations, such as the areas for injecting material. Without any difficulty, a design is feasible which permits the dissipation of energy by deformation. According to the invention, the design space can be utilized in a similarly favorable fashion as in the case of conventional steel designs. In the regions of the structure, which are subjected to lower stresses, there is no problem in making the wall thickness thinner than in the case of the regions, which are subjected to higher stresses. Tapering for the removal from the dies is generally not required for the Z-profile.

In accordance with the invention, a Z-profile is contemplated as the basic geometric shape. This profile can be produced in a simple or an extended form. The concept of a "Z-profile", within the scope of the invention, includes also a modified Z-profile, to which, so to speak, an additional Z (or L) is added at the lower or upper horizontal line of the Z. By doing this, the ease of removal from the die, that is to say, the removal from the die by means of pulling the upper and the lower die apart, is preserved. However, additional lateral slides can be provided in the forming tool, which make it possible to generate complicated forms, flat surfaces without a taper or a lead angle for removal from the die (for the purpose of joining mechanical elements), and also the necessary reinforcement by means of ribs, which is required in many areas. In individual cases or in individual areas of the support structure, the Z-profile—which merely represents the basic geometry—can also be simplified into an L-profile.

Within the framework of the invention, the magnesium die casting can consist of pure magnesium, but also of a magnesium alloy. Preferred are alloys which consist mainly of magnesium, especially those with 90% or more magnesium, which are resistant against being attacked by the atmosphere, against water, acids, alkaline solutions, oils and fats, that is to say against the substances, with which the support structure in a motor vehicle or in the repair shop may come into contact.

The support structure of a seat frame produced in accordance with the invention can be equipped with ribs, which are to be determined in a known manner by means of strength calculations. Receptacles for a lateral cover of the seat as well as for a balancing spring in a possibly contemplated height adjustment device of the seat can be preferably integrated into the base of the seat (the front edge of the seat). The structure or the profile can be produced without difficulty in such a manner, that the connecting members for the addition of springs below the seat are to be provided without the use of additional slides in the die casting form. Furthermore, the upholstery hooks as well as a cover for the mechanical adjustment elements of the height adjustment device of the seat can be integrated into the lateral parts of the seat of the support structure. Furthermore, the contours and the wall thickness of the rear tie-bar of the support structure can be optimized in such a manner that especially in the case of the option without height adjustment, any additional tie-rod for both of the side parts of the seats becomes unnecessary. Finally, the connection of the seat frame to the seat rails, which are provided on the floor panels of the motor vehicle—for example in order to save weight, and particularly for an option without height adjustment—can be limited to three points each.

Also, the support structure of a back-rest frame to be made, according to the invention, from a magnesium die casting is constructed for reasons of strength, as far as its basic geometry is concerned, from a Z-profile with the corresponding use of ribs for the side pieces. In this context, the upholstery as well as the connecting members of the draw spring of a wire mat, which forms the basis for the upholstery, can be integrated into the side pieces of the back-rest. The contouring of the upper tie-rod as well as of its connection with the side pieces of the back-rest of the seat can, like all the remaining contouring of the entire support structure, be determined by strength calculations and designed on the basis of a simple or an expanded Z-profile.

The back-rest frames in accordance with the invention can also be equipped with recesses for a head rest; these should preferably consist of lateral struts, which are placed one above the other, and the positioning, contouring and wall thickness of which should also be optimized by calculations in accordance with the desired values of strength. The design can be fashioned according to further aspects of the invention in such a manner that the casting of the recesses does not require any additional slides in the die casting form. In order to attach a head rest, a design can be chosen, which not only allows an easy removal from the die, but also, after the installation of a bushing, for example a plastic enclosure, the use of existing head rests. In the frame of the back-rest, recesses for an adjustment device of the back-rest of the seat are to be provided, preferably by means of a massive magnesium casting sprue. In doing this, the massive magnesium casting sprue together with the optimized recesses in the rest of the design should generate a stable and yet light-weight unit. Finally, a cover for a transfer rod as well as the upholstery hooks can be integrated into the lower tie-rod at the frame of the back-rest of the seat.

Details of the invention will be explained on the basis of a schematic drawing of an example of an embodiment of the invention. The following is shown:

FIG. **1** is a schematic presentation of a forming tool (for the back-rest of the seat) for the magnesium die casting, which consists partly of an exploded view; and

FIG. **2** is a section along the line II—II of FIG. **1**.

In the magnesium die casting tool, which consists of an upper die **1** and a lower die **2** according to FIG. **1**, the vehicle seat frame which, as a whole, is given the designation **3**, is shown as the example of an embodiment of the invention.

From FIG. **2** it can be seen that the vehicle seat frame has a Z-profile or cross section **4** as its basic geometry with an L-shaped bend **4***a* at the top, which has the purpose of stiffening it. The Z-profile has a center web **14** with side edges **14***b*. Flanges **15** extend from the side edges of the center web **14** in opposite directions from one another. The flanges extend from the center web at an angle of ninety degrees or more. This facilitates removal of the frame from the die casting tool. A lip **4***a* can extend from the distal edge of one or both of the flanges **15**. This Z-profile **4** is produced by means of a magnesium die casting process in a die casting form. The cast Z-profile **4** can be removed from the die in the simplest possible manner, namely by separation of the upper die **1** and the lower die **2** in the direction of separation **5** shown. An equally simple removal from the die is possible if a Z-profile is provided which is further modified in the manner defined above.

The vehicle seat back-rest frame shown in FIG. **1** consists of spaced side pieces **6**, having upper ends **6***a* and lower ends **6***b*, an upper tie-rod **7** connected to the upper ends of the side pieces and a lower tie-rod **8** connected to the lower end of the side pieces forming a generally rectangular or trapezoidal cast body. In an alternative form, the lower tie-rod **8** may be omitted forming a three sided frame. The side pieces can be equipped with an aperture **9** for a side airbag and/or with an aperture **11** or apertures **11** and **12** for the unlocking of the tilt mechanism in the case of two-door vehicles. Recesses **10** for a head rest can be integrated into the upper tie-rod **7**. The recess **10** may consist, according to the drawing, of cross struts **13**, which are placed one above the other, and the attachment, contouring and wall thickness of which are to be optimized for the desired values of strength in such a manner that the production of the recess does not require any additional slides during the die casting process.

The lower tie-rod **8** has a cover **8***a* integrated therein for a transfer rod of a seat adjustment mechanism to extend across the seat frame. The lower tie-rod is further formed with upholstery hooks **8***b* which are used to attach the seat upholstery to the frame. Magnesium casting sprues **18** are located at the side pieces **6** or lower tie-rod **8**. These can be used as a receptacle for a back rest adjustment device due to the increased strength provided by the extra material of the sprue. The side pieces **6** are integrally formed with upholstery hooks or support brackets **17** which can be used to mount the seat upholstery, an upholstery strap, or the draw spring of a wire mat.

A frame in accordance with the invention for a seat for a motor vehicle can be manufactured from magnesium in a single operation, if it consists of a design, which has the Z-profile as its basic geometry, and if it is produced by the magnesium die casting process.

We claim:

1. A frame (3) for a vehicle seat assembly characterized in that it has a single piece body cast of magnesium alloy having a pair of spaced elongated side pieces (6) each having upper and lower ends (6*a*, 6*b*) and an upper tie-rod (7) connected to the upper ends of the side pieces, the side pieces having a profile (4) which is generally Z-shaped with a center web (14) having opposite side edges (14*a*, 14*b*) and flanges (15) extending from the side edges in opposite directions relative to one another and at an angle of at least ninety degrees to the center web.

2. The frame of claim 1 characterized in that the single piece cast body further comprises a lower tie-rod (8) connected to the lower ends of the side pieces.

3. The frame according to claim 2, characterized by a cover (8*a*) for a transfer rod which is integrated into the lower tie-rod (8) of the frame.

4. The frame according to claim 2 characterized by upholstery hooks (16) which are integrated into the lower tie-rod of the frames.

5. The frame of claim 1 characterized by a lip (4*a*) extending from a distal edge of one of the flanges of the Z-shaped profile of the side pieces, the lip extending generally parallel to the center web.

6. The frame of claim 1 characterized in that the side pieces include apertures (11, 12) for attaching hardware to attach the frame to a supporting structure.

7. The frame according to claim 1, characterized in that into the side pieces of the frame of the seat, upholstery hooks (17) as well as a cover for the mechanical adjustment elements for an adjustment device for the height of the seat are integrated.

8. The frame according to claim 1, characterized in that an upholstery strap as well as support brackets (17) for a draw spring of a wire mat to be installed on the frame are integrated into the side pieces (6) of the frame.

9. The frame according to claim 1, characterized in that in the upper tie-rod (7) of the frame, recesses (10) for a head rest are provided, which include at least two cross struts (13), which are located one below the other.

10. The frame according to claim 1, characterized in that a magnesium casting sprue is located at the side pieces (6) or at the lower tie-rod (8) of the frame as a receptacle for the back-rest adjustment device.

11. A process for the production of the frame according to claim 1, characterized in that the metal body is die cast in a single operation in a die without a core.

12. The process according to claim 1, characterized in that in order to achieve a multiplicity of forms, additional lateral slides are installed in the casting die.

* * * * *

# United States Patent [19]

**Yokoyama**

[11] **Patent Number: 4,673,215**

[45] **Date of Patent: Jun. 16, 1987**


[54] **SEAT FRAME FOR AUTOMOBILE SEATS**


[75] Inventor: **Shoh Yokoyama**, Akishima, Japan

[73] Assignee: **Tachikawa Spring Co., Ltd.**, Tokyo, Japan



[21] Appl. No.: **849,941**

[22] Filed: **Apr. 9, 1986**

[30] **Foreign Application Priority Data**

Apr. 9, 1985 [JP] Japan ..... 60-52655[U]

[51] **Int. Cl.**[4] ..... **A47C 7/02**

[52] **U.S. Cl.** ..... **297/452**; 248/429; 248/430

[58] **Field of Search** ..... 297/452; 248/396, 430, 248/429



[56] **References Cited**

U.S. PATENT DOCUMENTS

| | | | |
|---|---|---|---|
| 1,771,987 | 8/1930 | Cronwall | 248/429 |
| 1,794,650 | 3/1931 | Simpson et al. | 248/429 |
| 2,014,553 | 9/1935 | Browne | 248/430 |
| 2,130,159 | 9/1938 | Saunders et al. | 248/430 |
| 4,222,543 | 9/1980 | Gedig et al. | 248/396 |
| 4,582,361 | 4/1986 | Kennel | 297/452 |

FOREIGN PATENT DOCUMENTS

| | | | |
|---|---|---|---|
| 2048326 | 4/1972 | Fed. Rep. of Germany | 297/452 |
| 0155126 | 9/1982 | Japan | 297/452 |



*Primary Examiner*—James T. McCall

*Attorney, Agent, or Firm*—Cushman, Darby & Cushman



[57] **ABSTRACT**

A seat frame for use in an automotive seat. The seat frame is divided into four sections, that is, front, rear, right and left sections, and at least the right and left sections or side frame members are respectively formed in a substantially Z-shaped configuration. Namely, each of the side frame members comprises a vertically extending web, an upper flange and a lower flange projecting in opposing directions to each other with respect to the web, whereby, when loads are applied to the side frame members, the respective centers of shearing thereof are caused to exist in their webs or adjacent portions thereof, resulting in the increased strength.


**2 Claims, 8 Drawing Figures**

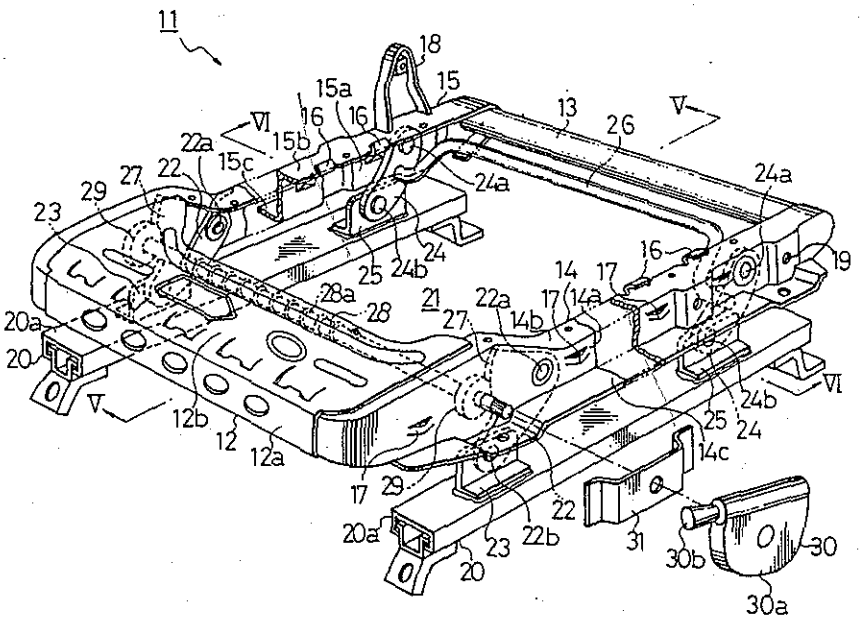


Z cross-section to enhance strength

four pieces welded together

# SEAT FRAME FOR AUTOMOBILE SEATS

## BACKGROUND OF THE INVENTION

1. Field of the Invention

The present invention relates to a seat frame for an automotive seat and, more particulary, to the reinforced structure of such seat frame.

2. Description of the Prior Art

Generally, as shown in FIG. 1, a seat S includes a seat frame (1) internally thereof which is formed of a rigid body such as metal or the like. That is, the seat S comprises the seat frame (1), a resilient member enclosing the periphery of the seat frame (1), and a trim cover assembly covering the surface thereof.

Conventionally, as such seat frame, there has been frequently used a seat frame which is formed as follows: that is, four frame materials each having a U-shaped section, namely, comprising a web and two upper and lower flanges projecting in the same direction relative to the web are connected to one another in a quadrilateral form with the flanges thereof facing internally. In this seat frame, when a lifter mechanism is equipped internally thereof, the lower flanges come into interference with the link means or leg means of the lifter mechanism. For this reason, there are formed holes or notches in the flanges, so that the link or leg means of the lifter mechanism can be faced to the lower side of the seat frame by means of such holes or notches.

Also, in a pan-type seat frame (1) as shown in FIGS. 2 and 3, when it is equipped with a lifter mechanism, two frame members of an L-shaped section are respectively attached to the two sides of the lower portion of the seat frame (1), and the link members (4)(5) of the lifter mechanism are connected to the vertical portions of the frame members (2), (see FIG. 2). On the other hand, when no lifter mechanism is provided, leg members (7) are fixedly secured to the lower portions of the two sides of the seat frame (1), so that the seat frame (1) can be attached via these leg members (7) to floor-side members such as slide rails and the like, (see FIG. 3).

In addition, such pan-type seat frame (1) is diadvantageous in strength, and, therefore, the side portions thereof are reinforced, especially the side surface thereof to which a reclining device is mounted is reinforced by a reinforcing member (8).

As described above, in the prior art, the seat frame formed of the frame materials each having a U-shaped section must be formed in the flange portions thereof with the holes or notches for prevention of interference with the lifter mechanism or the like, with the result that the seat frame is decreased in strength and involves a complicated manufacturing process which lowers the productivity thereof. This type of seat frame is also poor in a working efficiency due to the fact that, when it is directly fixed to the floor-side members such as the slide rails or the like, its upper flange stands in the way. Also, the pan-type seat frame requires another member for reinforcing or mounting, which increases the number of parts. As a result of this, the seat frame is disadvantageous in that it is heavy in weight and expensive.

## SUMMARY OF THE INVENTION

The present invention is devised in view of the above-described circumstances in the prior art. Accordingly, it is an object of the invention to provide a seat frame which is improved in form to be able to eliminate the drawbacks found in the above-mentioned prior art seat frames.



To accomplish this object, according to one aspect of the invention, the present seat frame includes two right and left side frame members each of substantially Z-shaped cross-section. In the Z-shaped cross-section side frame members, when loads are applied thereto, their respective centers of shearing forces are to be set on their respective webs or on the portions adjacent thereto, with the result that no deflection will be produced in the two side frame members due to torsion. Therefore, the side frame member of Z-shaped cross-section is advantageous in strength over frame members of U-shaped or L-shaped cross section.

According to another aspect of the invention, the two right and left side frame members are formed such that the lower flanges thereof are faced outwardly respectively. This enables the front and rear links of a lifter mechanism to be rotated without interfering with the right and left side frame members, which eliminates the need to form holes or notches in the flanges of the right and left side frame members for prevention of interference. Thus, the seat frame formed of such side frame members, as a whole, is sufficiently reliable in strength as well as the manufacturing process thereof can be simplified, resulting in the improved productivity.

According to still another aspect of the invention, the front and rear links of the lifter mechanism can be pivotally attached directly to the two right and left frame members, which eliminates the need for provision of another members such as frames for arranging the lifter mechanism as in the prior art seat frames. As a result of this, the weight and cost of the seat frame can be reduced.

According to yet another aspect of the invention, the front frame of the present seat frame is provided with a longer upper flange and thus various parts can be mounted to this upper flange. For example, a power motor may be mounted to the lower surface of the upper flange and then may be connected to the operation shaft of the lifter mechanism, so that it can serve as an electric-powered lifter.

The above and other related objects and aspects of the invention will be apparent from a reading of the following description of the disclosure found in the accompanying drawings and novelty thereof pointed out in the appended claims.

## BRIEF DESCRIPTION OF THE DRAWINGS

FIG. 1 is an explanatory view showing a seat frame provided within a seat;

FIG. 2 is a perspective view of a conventional seat frame;

FIG. 3 is a perspective view of another conventional seat frame;

FIG. 4 is a perspective view of a seat frame according to the invention when it is mounted to slide rails through a lifter mechanism;

FIG. 5 is a sectional view taken along the line V—V in FIG. 4;

FIG. 6 is a sectional view taken along the line VI—VI in FIG. 4;

FIG. 7 is a perspective view of a seat frame according to the invetnion when it is mounted directly to the slide rails without using the lifter mechanism; and,

FIG. 8 is a sectional view taken along the line VIII—VIII in FIG. 7.

## DETAILED DSCRIPTION OF PREFERRED EMBODIMENTS OF THE INVENTION

In the drawings, reference numeral (11) designates a whole seat frame constructed in accordance with the present invention. This seat frame (11) is a so-called a quadrisection frame which can be formed by connecting four independent frame members, that is, two front and rear frame members (12) (13) and two side frame members (14), (15) to one another in a quadrilateral form. The two right and left side frame members (14), (15) of the seat frame (11) comprise upper flanges (14*b*), (15*b*) extending inwardly and lower flanges (14*c*), (15*c*) extending outwardly relative to the webs (14*a*), (15*a*) thereof, that is, the upper and lower flanges extend in the mutually opposing directions to provide a substantially Z-shaped cross section.

The front frame member (12) is formed in a channel shape with its upper and lower flanges (12*b*), (12*c*) both extending inwardly of its web (12*a*), the upper flange (12*b*) being formed substantially longer than the lower flange (12*c*). The rear frame member (13) is formed of a pipe material of a round section.

Also, in the seat frame (11), along the inner edges of the upper flanges (14*b*), (15*b*) of the right and left side frame members (14), (15), there are provided clamp piece members (16) in an opposing manner, which members (16) are used to mount spring members for receiving a pad. On the external surfaces of the webs (14*a*), (15*a*) of the right and left side frame members (14), (15), there are provided a plurality of raised engagement portions (17) for securing the end portions of a trim cover assembly when the trim cover assembly is placed over the seat frame (11). Also, on the rear end portion of the upper flange (15*b*) of the right side frame (15), there is erected a hinge bracket (18) to which a seat back is connected, and, correspondingly to this, in the rear portion of the web (14*a*) of the left side frame member (14), there is formed a mount hole (19) for mounting a reclining device.

The seat frame (11) is mounted to slide rails (20) fixed to the side of a vehicle floor in a manner that it can be moved vertically by means of a lifter mechanism (21).

The above-mentioned lifter mechanism (21) is arranged as follows: that is, in the front portion of the seat frame (11), front links (22) are pivotally attached at the respective first ends thereof via shaft pins (22*a*) to the inside surfaces of the webs (14*a*), (15*a*) of the right and left side frame members (14), (15), respectively, while the other ends of the front links (22) are pivotally secured via shaft pins (22*b*) to leg members (23) fixed to the upper surface front portions of upper rails (20*a*) of the slide rails (20), respectively. In the rear portion of the seat frame (11), rear links (24) are pivotally mounted at the respective first ends thereof via shaft pins (24*a*) to the inside faces of the webs (14*a*), (15*a*) of the right and left side frame members (14), (15), with the other ends of the rear links (24) being pivotally attached via shaft pins (24*b*) to leg members (25) fixed to the upper surface rear portion of the upper rails (20*a*) of the slide rails (20), while the central portions of the two rear links (25) are interconnected via a connecting rod (26) to each other.

Also, the front links (22) are respectively provided with integrally projecting sector gears (27) centering around the pivotally connected portions of the front links to the right and left side frame members (14), (15). Correspondingly to the sector gears (27) of the front links (22), between the webs (14*a*) and (15*a*) of the two right and left side frame members (14) and (15) there is journaled an operation shaft (28), to both ends of which shaft (28) pinion gears (29) are fixed respectively. The pinion gears (29) are engaged with the sector gears (27) of the front links (22), respectively.

A torsion spring (28*a*) is wound around the operation shaft (28), with one end of the spring being secured to a knock pin projected from the operation shaft (28) and the other end thereof being abutted against and secured to the lower surface of the upper flange (15*b*) of the right side frame member (15), whereby the operation shaft (28) is rotatably biased in one direction. That is, the operation shaft (28) is rotatably biased so that the front links (22) can be risingly rotated via the pinion gears (29) about the pivoally mounted portions thereof to the leg members (23).

Further, one end of the operational shaft (28) is projected externally through the web (14*a*) of the left side frame member (14), and a lock device (30) is mounted to the projected portion of the shaft (28).

This lock device (30) employs a conventionally well known rotational engagement mechanism and thus a detailed description about the lock device (30) is not given here. Briefly, it comprises a device body (30*a*) to be connected to the operation shaft (28), and an operation lever (30*b*) which can be slided so as to come out of or go into the device body (30*a*). When the operation lever (30*b*) is stored within the lock device body (30*a*), the lock device (30) is then locked unrotatable relative to a bracket (31) fixed to the outer surface of the web (14*a*) of the left side frame member (14). When the operation lever (30*b*) is drawn out of the lock device body (30*a*), such locking is removed.

And, when the operation lever (30*b*) is pulled out of the lock device body (30*a*) to thereby remove such locked condition, then the torsion spring (28*a*) resiles to rotate the operation shaft (28). This rotational movement of the operation shaft (28) is transmitted via the pinion gears (29) to the sector gears (27) of the front links (22), so that the front links (22) are rotated in the stand-up direction thereof and at the same time the rear links (24) are also risingly rotated in the stand-up direction thereof via the associated frame members. As a result of this, the seat frame (11) is moved upwardly. Thus, when the seat frame (11) reaches a desired position in height, the operation lever (30*b*) can be stored within the lock device (30). In this way, the seat frame (11) can be adjusted in height.

Heretofore, the seat frame (11) according to the invention has been described on assumption that it is mounted via the lifter mechanism (21) to the slide rails (20). The seat frame (11) of the invention, however, may also be mounted directly to the slide rails (20) with no intervention of the lifter mechanism.

That is, as shown in FIGS. 7 and 8, in this case, the seat frame (11) is fixed to the upper surfaces of the upper rails (20*a*) of the slide rails (20) with bolts (33) and nuts (34) through mount holes (32) formed in the respective front and rear portions of the lower flanges (14*c*), (15*c*) of the two right and left side frame members (14), (15). It should be noted here that such mounting of the seat frame (11) can be easily realized in the above-mentioned lower flanges (14*c*) and (15*c*), because the engagement portions (17) for engagement of the trim cover assembly are provided in the webs (14*a*) and (15*a*) of the right and left side frame members (14) and (15) and thus the lower flanges (14*c*), (15*c*) are exposed externally even when

the seat frame (11) is covered with the trim cover assembly.

Accordingly, in this embodiment, the lower flanges (14*c*) and (15*c*) of the right and left side frame members (14) and (15) are used to mount the seat frame (11) directly to the slide rails (20), thereby eliminating the need for provision of further members such as leg members or the like as in the conventional seat frames. This is effective in improving the productivity of the seat frame as well as reducing the cost thereof.

In the illustrated seat frame (11), although only the right and left side frame members (14) and (15) are formed so as to have a substantially Z-shaped cross section, of course, the front and rear frame members (12) and (13) may also be formed similarly in a substantially Z-shaped cross section.

Also, in the illustrated embodiment, as described above, the right and left side frame members (14), (15) are coupled to the front and rear frame members (12), (13), with the upper flanges (14*b*), (15*b*) thereof facing internally and the lower flanges (14*c*), (15*c*) thereof facing externally. However, for example, when the seat frame (11) is mounted to slide rails which are narrow in width and are located inwardly of the two right and left side frame members (14), (15), the seat frame (11) may be formed in a manner that the right and left side frame members (14), (15) are reversed in direction as against the illustrated embodiment, that is, the upper flanges (14*b*), (15*b*) thereof are faced externally while the lower flanges (14*c*), (15*c*) thereof are faced internally. Thus, the seat frame (11) can be attached to the above narrow slide rails in the internally facing lower flanges (14*c*), (15*c*) of the side frame members thereof.

As has been discussed hereinbefore, the seat frame of the invention is advantageous in strength, since the right left side frame members thereof are respectively formed in a substantially Z-shaped cross section with the result that the shearing centers thereof exist in the webs therefor or adjacent portions thereof. Also, in case where the seat frame of the invention is provided with a lifter mechanism therein, the parts of the lifter mechanism can respectively be attached to the right and left side frame members with no interference of the flanges thereof and thus there is eliminted the need to form holes or notches in the flanges of the frame members, with the result that the seat frame of the invention is advantageously increased in strength. At the same time, there is no need for provision of further members such as frames for arrangement of the lifter mechanism and, therefore, the seat frame of the invention can be reduced in weight. On the other hand, in case where the seat frame of the invention is not equipped with such lifter mechanism, the seat frame can be mounted directly to members on the side of the vehicle floor by using the lower flanges of the right and left side frame members thereof to thereby eliminate the need for provision of further members such as leg members or the like, which is advantageous in productivity and is also effective in reducing the cost thereof. Accordingly, the present invention provides great practical effects.

What is claimed is:

1. A seat frame comprising:

first and second side frame members each comprising a vertically extending web, an upper flange element integrally formed on an upper edge of said web and a lower flange element integrally formed along a lower edge of said web, said upper and lower flanges projecting horizontally in opposite directions from said web;

a front frame member welded to a forward end of each of said side frame members, said front frame member having a channel-shaped configuration and including an upper flange and a lower flange, said upper flange of said front frame member being longer than said lower flange of said front frame member; and

a rear frame member welded to a rearward end of each of said side frame members.

2. A seat frame as in claim 1, wherein said upper flange of each of said side frame members projects inwardly relative to said web and said lower flange of each of said side frame members projects outwardly relative to said web.

* * * * *

FIG.1

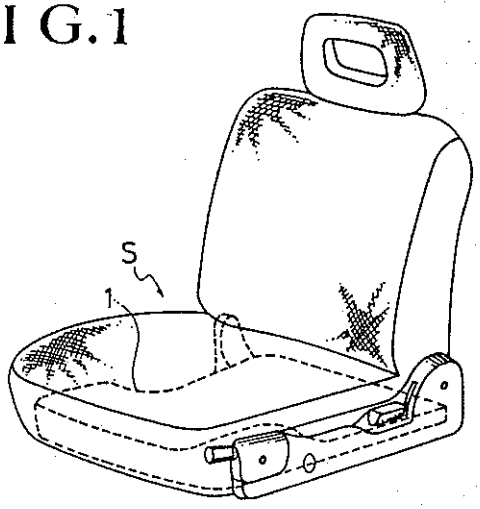


FIG.2
(PRIOR ART)

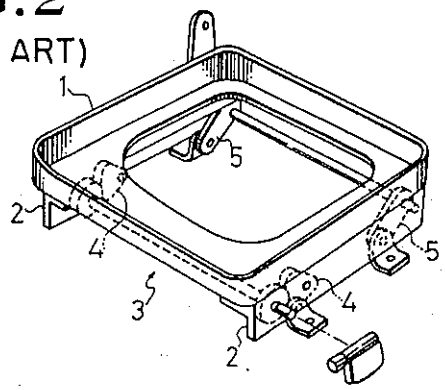


FIG.3
(PRIOR ART)

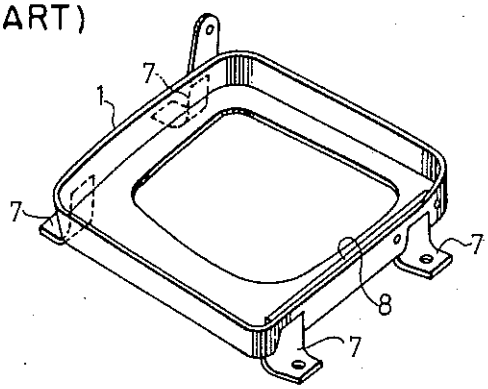

FIG.4

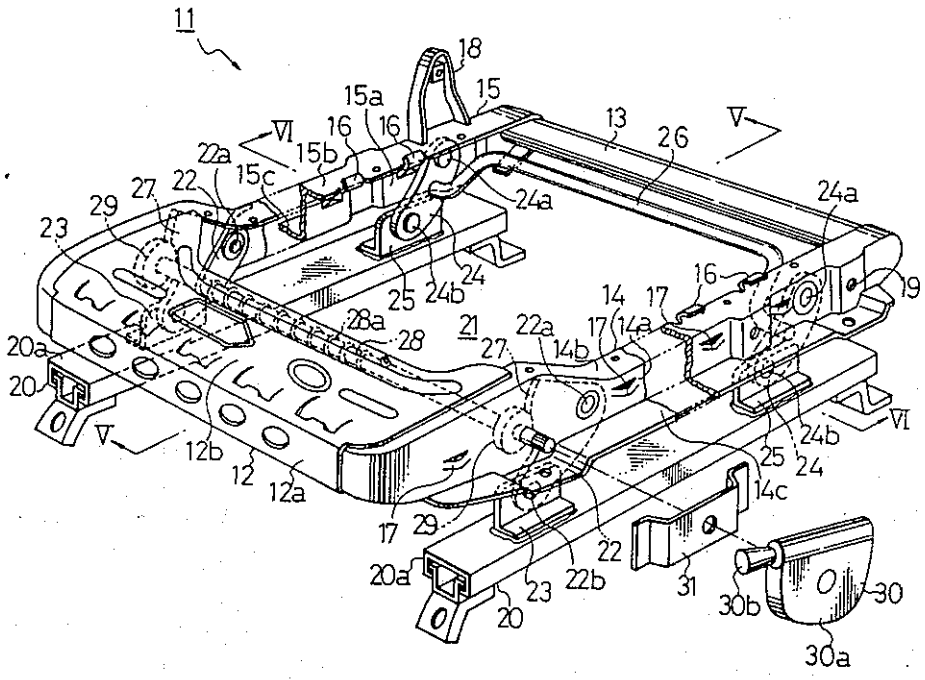
11
18
15a
15
16
16
13
26
V
VI
22a
15b
15c
22
27
29
23
24a
24a
25
24b
24
16
19
14
17
28a
28
21
22a
17
14a
27
14b
20a
20
V
12b
12
12a
25
24b
24
VI
14c
17
29
22
20a
23
22b
31
30b
30
20
30a

FIG.5

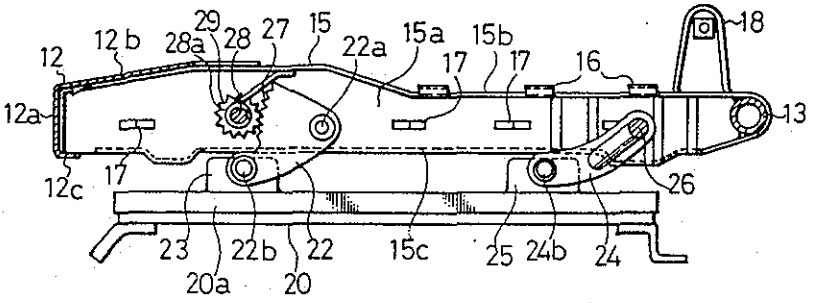
29
28
27
15
22a
15a
15b
18
12
12b
28a
17
17
16
12a
13
12c
17
26
23
22b
22
15c
25
24b
24
20a
20

FIG.6

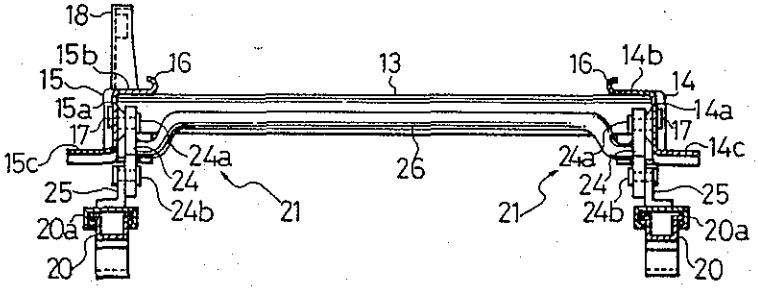
18
15b
16
13
16
14b
15
14
15a
14a
17
17
14c
15c
24a
24a
24
26
24
25
25
21
21
24b
24b
20a
20a
20
20

FIG.7

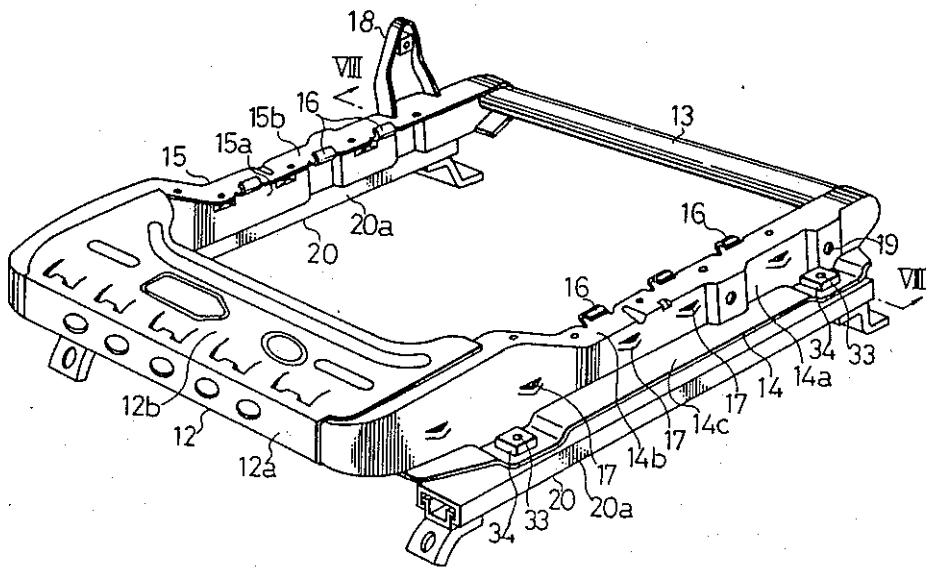
18
VIII
16
15b
15a
15
13
20a
20
16
19
VII
16
34
33
14
14a
17
14c
17
14b
17
12b
12
12a
20
20a
34
33

FIG.8

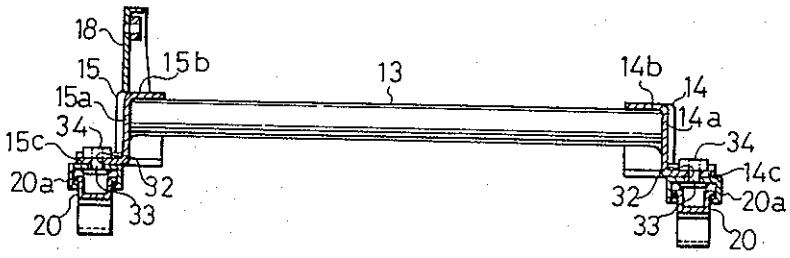
18
15
15b
15a
34
15c
20a
20
33
32
13
14b
14
14a
34
14c
32
20a
33
20

US005328248A

# United States Patent [19]

Nishiyama

[11] Patent Number: 5,328,248

[45] Date of Patent: Jul. 12, 1994

[54] SEAT FRAME FOR A VEHICLE

[75] Inventor: Kunio Nishiyama, Sosono, Japan

[73] Assignee: Toyota Jidosha Kabushiki Kaisha, Toyota, Japan

[21] Appl. No.: 915,613

[22] Filed: Jul. 21, 1992

[30] Foreign Application Priority Data

Jul. 23, 1991 [JP] Japan ..... 3-182435
Jul. 23, 1991 [JP] Japan ..... 3-182436

[51] Int. Cl.[5] ..... A47C 7/02
[52] U.S. Cl. ..... 297/452.56; 297/452.18
[58] Field of Search ..... 297/452, 441, 443, 218, 297/216

[56] References Cited

U.S. PATENT DOCUMENTS

| | | | |
|---|---|---|---|
| 3,289,220 | 12/1966 | Grimshaw | 297/452 |
| 3,329,466 | 7/1967 | Getz | 297/452 |
| 4,037,829 | 7/1977 | Crosby | 297/452 |
| 4,147,336 | 4/1979 | Yamawaki | 297/452 |
| 4,509,796 | 4/1985 | Takagi | 297/452 |
| 4,695,097 | 9/1987 | Muraishi | 297/452 |
| 4,834,458 | 5/1989 | Izumida | 297/452 |
| 4,861,104 | 8/1989 | Malak | 297/218 |
| 4,863,219 | 9/1989 | Ochiai | 297/443 |
| 5,013,089 | 5/1991 | Abu-Isa | 297/452 |

FOREIGN PATENT DOCUMENTS

| | | | |
|---|---|---|---|
| 62-111227 | 7/1987 | Japan . | |
| 62-111228 | 7/1987 | Japan . | |
| 179474 | 5/1962 | Sweden | 297/218 |

*Primary Examiner*—Flemming Saether
*Attorney, Agent, or Firm*—Cushman, Darby & Cushman

[57] ABSTRACT

A front-lower arm portion is disposed in the forward direction of a vehicle, while a rear-lower arm portion is disposed in the rearward direction of the vehicle. The rear-lower arm portion is formed of a material having greater tensile strength and compressive strength than that of the front-lower arm portion. A rear end portion of the front-lower arm portion is overlaid with a front end portion of the rear-lower arm portion, thereby securing both end portions together by means of a rivet.

21 Claims, 13 Drawing Sheets

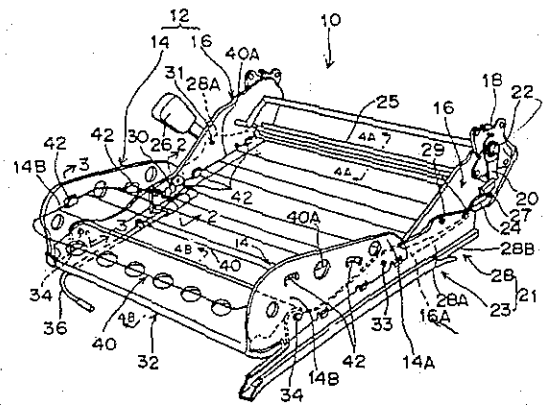


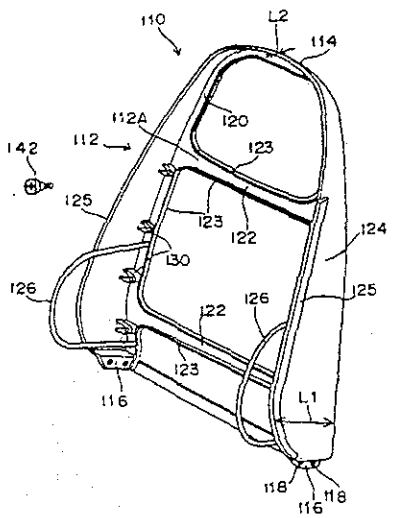


=DE-OS 4224063

FIG. 1

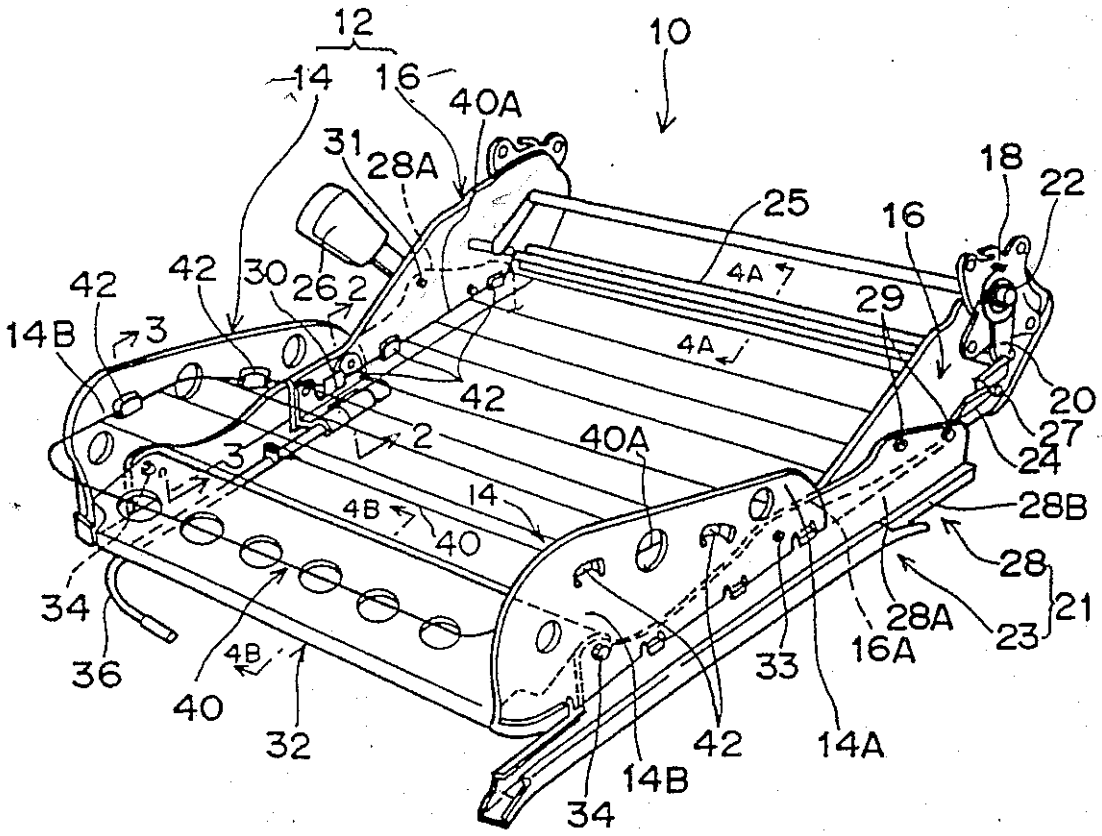
12
14
16
10
40A
31
28A
25
18
22
16
42
42
30
26
2
4A
29
14B
3
4A
42
20
27
24
2
40A
3
14
4B
40
28B
28
34
21
28A
23
36
4B
33
16A
40
32
42
14A
14B
34

FIG. 2

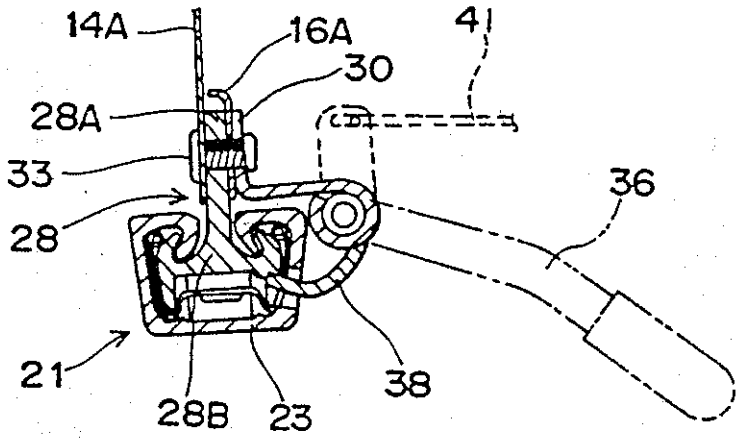

FIG. 3

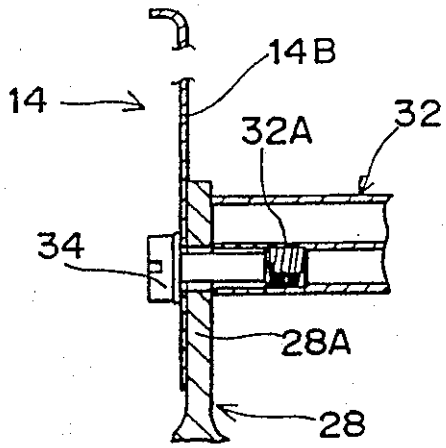

FIG. 4A

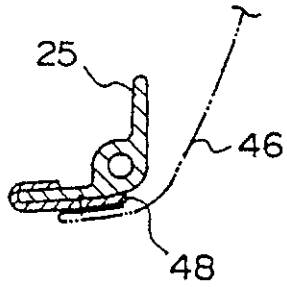


FIG. 4B

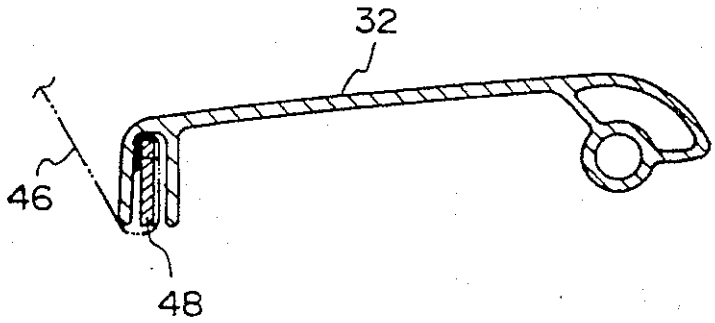

FIG. 5

PRIOR ART

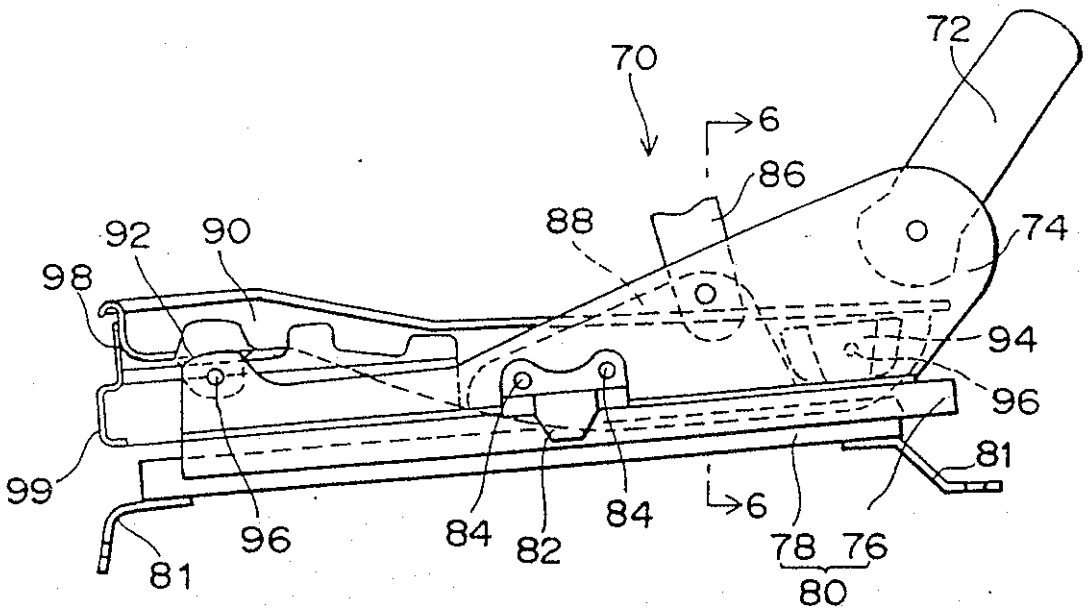

FIG. 6

PRIOR ART

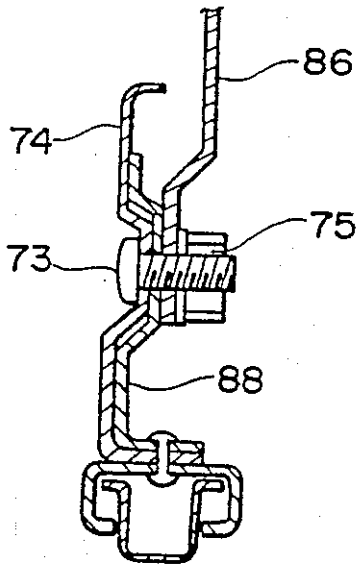

FIG. 7A

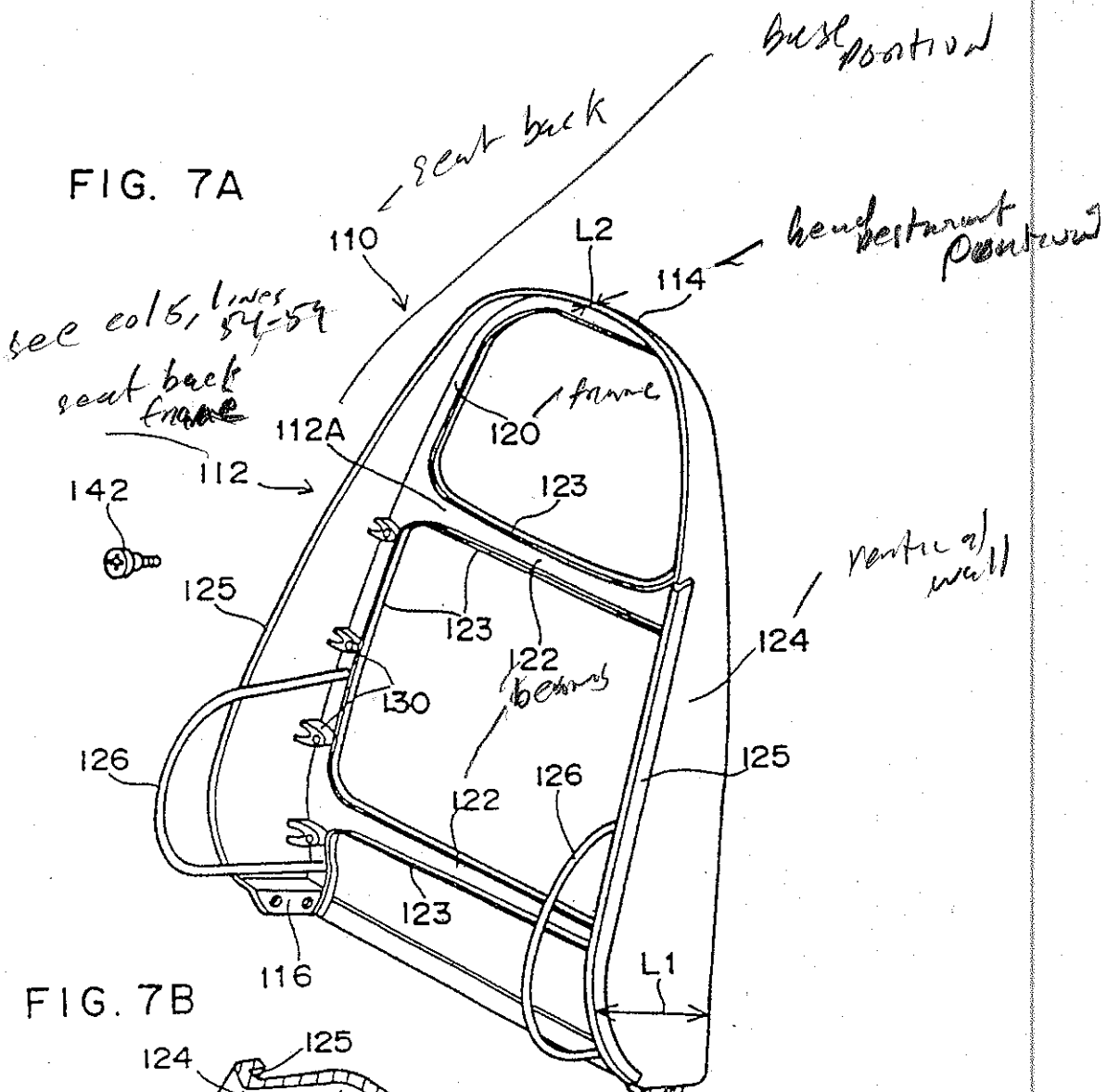
base portion
seat back
110
L2
114
headrestraint portion
see col 6, lines 54-59
seat back frame
112A
120
frame
112
142
123
125
123
122
124
vertical wall
130
beams
126
125
126
122
123
116
L1
118
116
118
mounting holes
mounts

FIG. 7B

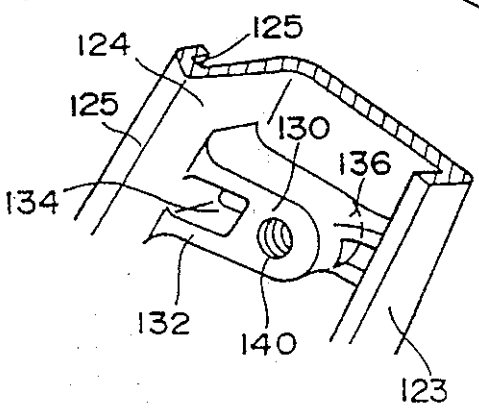
124
125
125
130
136
134
132
140
123

FIG. 8

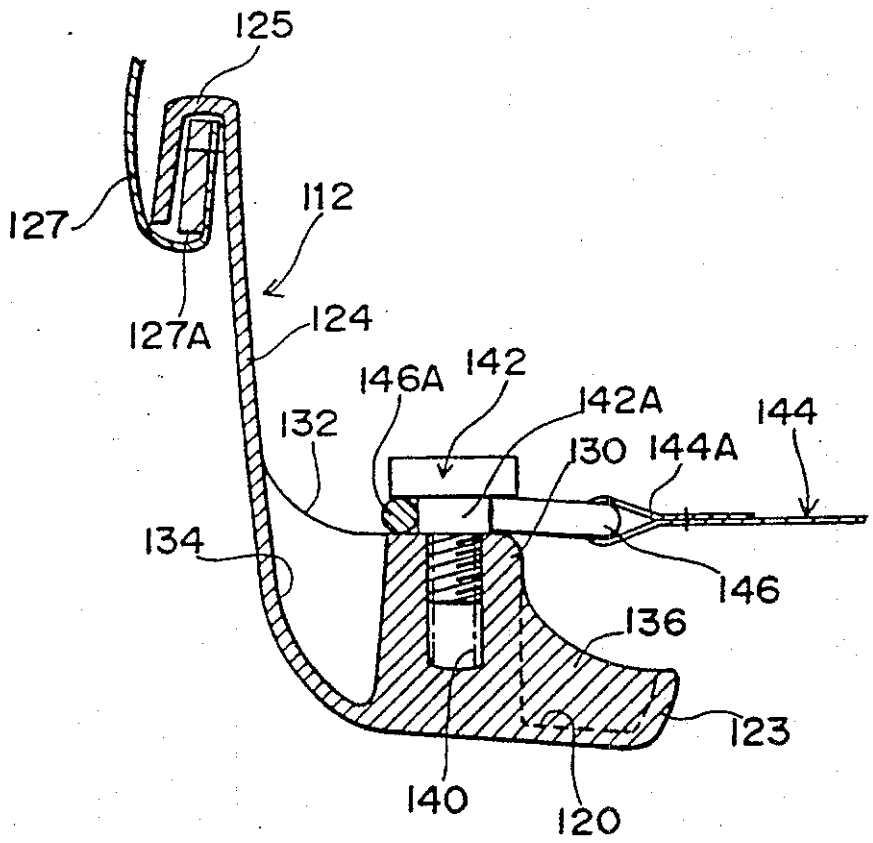
125
127
112
127A
124
146A
142
142A
144
132
130
144A
134
146
136
123
140
120

FIG. 9

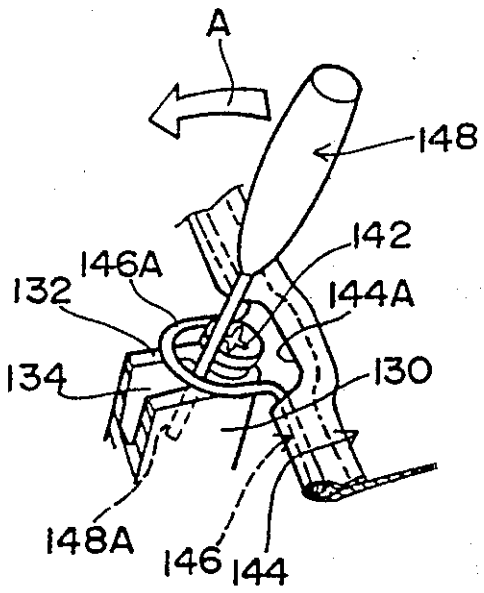

FIG. 10

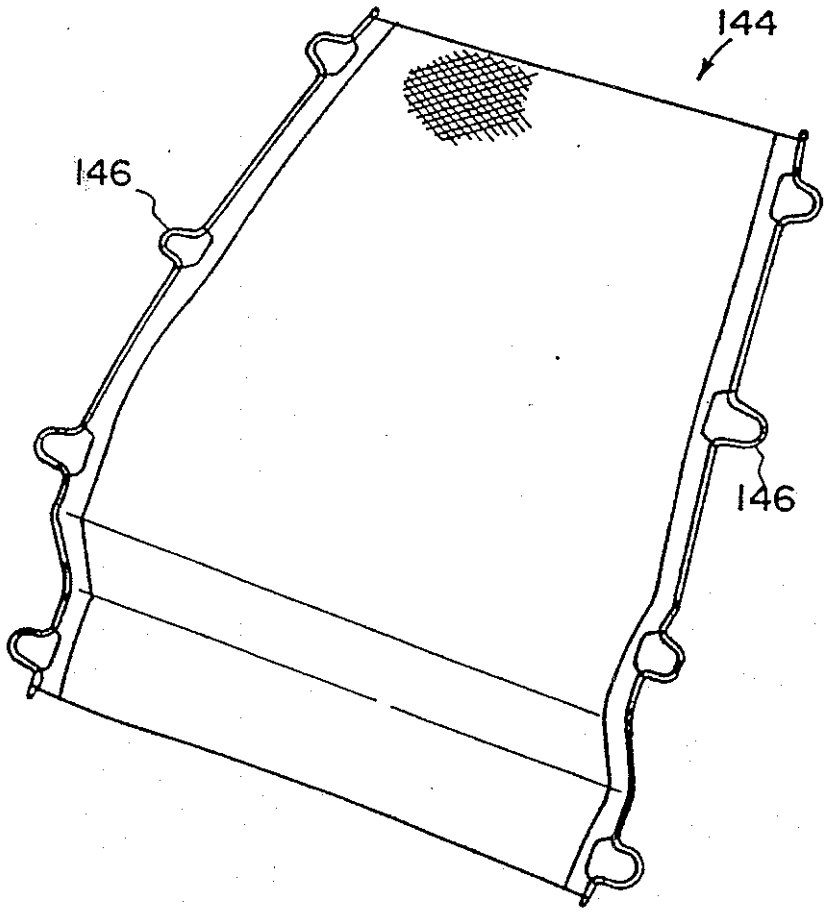

FIG. 11

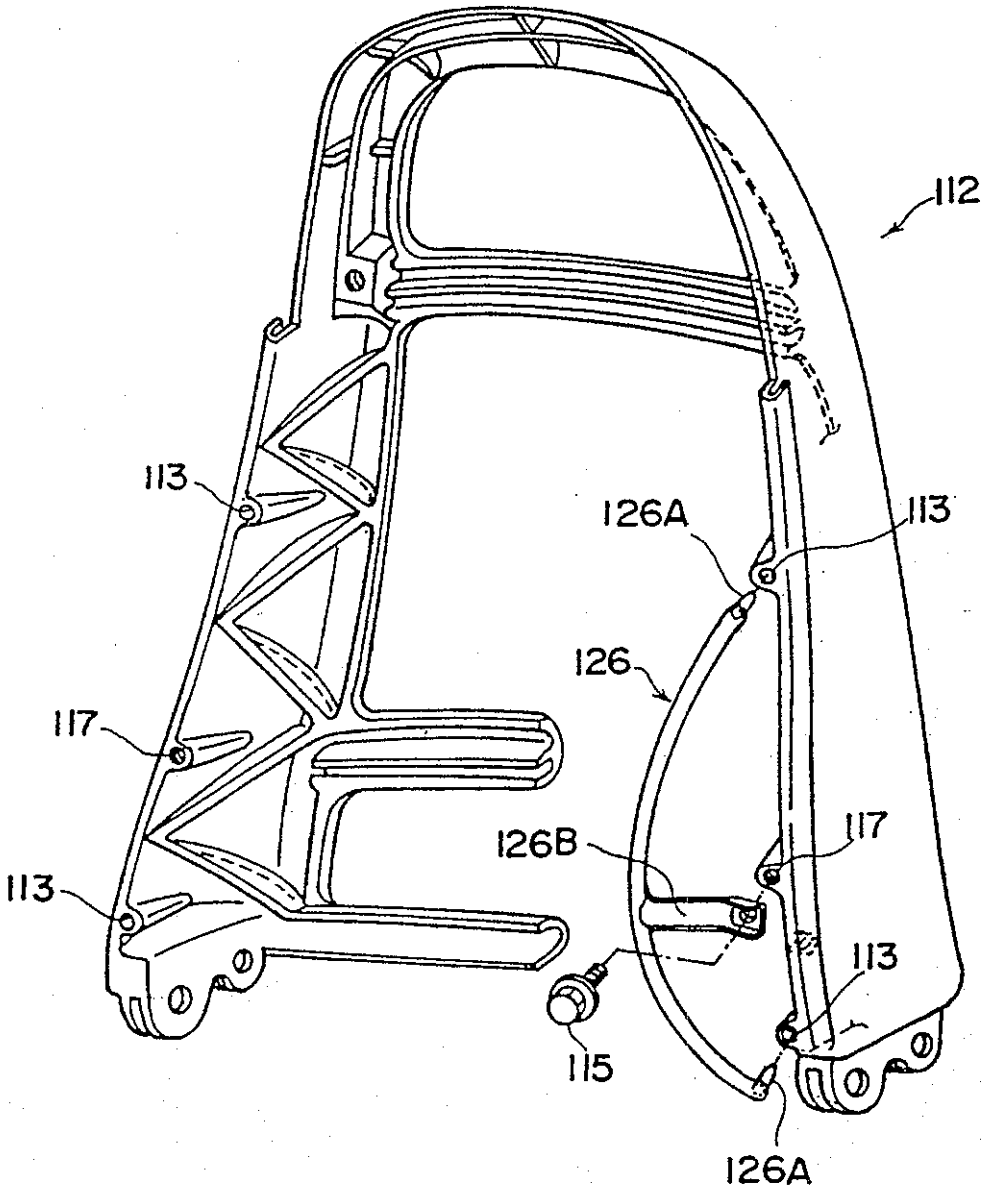

FIG. 12
PRIOR ART

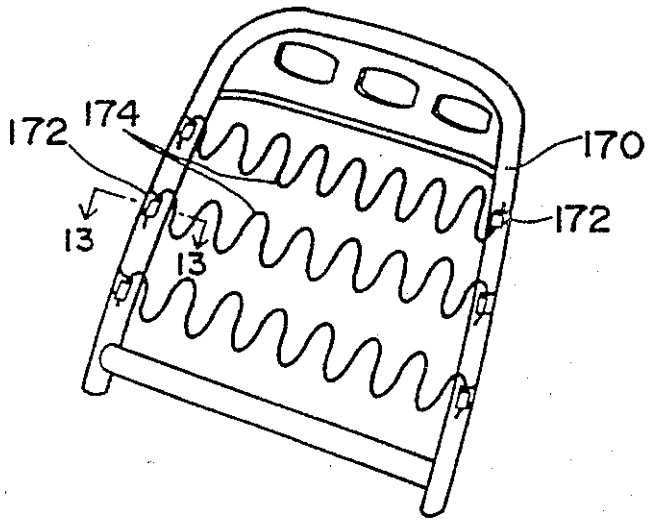


FIG. 13
PRIOR ART

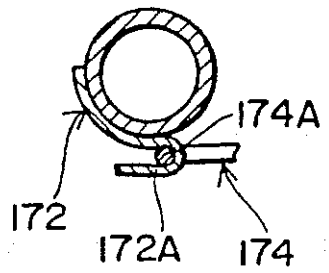

FIG. 14
PRIOR ART

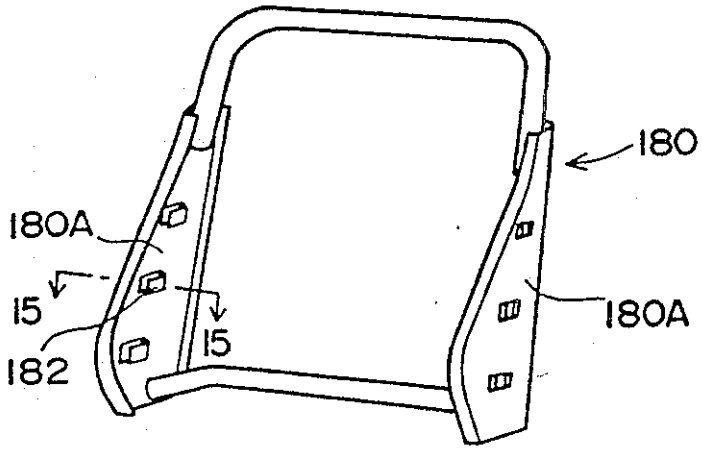


FIG. 15
PRIOR ART

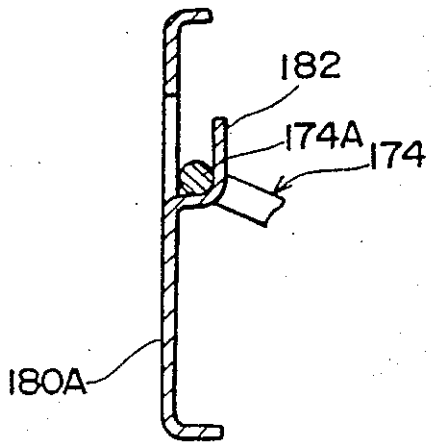

# SEAT FRAME FOR A VEHICLE

## BACKGROUND OF THE INVENTION

1. Field of the Invention

The present invention relates to a vehicle seat for automobiles and the like.

2. Description of the Related Art

Japanese Utility Model Application Laid-Open No. 62-111227 discloses one example of a conventional vehicle seat which is provided in automobiles and the like.

Referring to FIG. 5, a vehicle seat 70 has an upper arm 72 and a lower arm 74, each of which is formed from a press-formed iron product. An upper rail 76 of a seat track 80 is fixed to the underside of the lower arm 74 by means of unillustrated rivets or the like. A lower rail 78 of the seat track 80 is anchored to a vehicle floor (not shown) via brackets 81. A locking bracket 82 is secured by rivets 84 to a substantially central portion of the upper rail 76 in the longitudinal direction of the upper rail 76.

As illustrated in FIG. 6, an anchoring portion 86 of a seat belt is mounted to the lower arm 74 by portion of a weld bolt 73 and a nut 75, at which location a reinforcing member 88 is fixed by welding and the like for reinforcement. As shown in FIG. 5, the lower arm 74 is bolted to brackets 92 and 94 by means of bolts 96 at two points near both end portions of the lower arm 74 in the longitudinal direction of the lower arm 74. The brackets 92 and 94 are disposed near both end portions of a cushion frame 90 in the longitudinal direction of the cushion frame 90.

However, the vehicle seat 70 has a disadvantage in that the lower arm 74 is heavy because it is formed from a one-piece press-formed iron product. In order to overcome the disadvantage, a possible construction can be formed in which the lower arm 74 is integrally formed of any light metal such as aluminum, which is lighter than iron. Nevertheless, this structure still has an inconvenience in that the strength of the lower arm 74 is too low to sufficiently transmit a load from the lower arm 74 to the vehicle floor.

## SUMMARY OF THE INVENTION

In view of the above-described fact, an object of the present invention is to provide a vehicle seat in which a load imposed on a lower arm can be transmitted to a vehicle floor satisfactorily and a lightweight lower arm is achievable.

According to the present invention, the vehicle seat comprises: a front-lower arm portion; and, a rear lower arm portion, which is formed of a material having greater tensile strength and compressive strength than the front-lower arm portion, the rear-lower arm portion being overlaid with the front-lower arm portion so as to be fixed jointly thereto.

With the above structure according to the present invention, a load imposed on the lower arm of the vehicle seat falls into three major categories: a load acting in the rearward direction of the lower arm, which is imparted from a seat back; a tensile load, which is imparted from a seat belt; and, a load acting in the downward direction of the lower arm, which is imparted by an occupant's body weight. These loads are imposed chiefly to the rear-lower arm portion and are then transmitted to the vehicle floor. The rear-lower arm portion is formed of a material such as an iron plate, which has greater tensile strength and compressive strength than the front-lower arm portion. As a result, the strength of the rear portion of the lower arm is increased such that the rear portion of the lower arm is able to sufficiently transmit a load to the vehicle floor. In addition, the front portion of the lower arm is a lightweight member made of, for example, light metal such as aluminum, which has a relatively low degree of tensile strength and compressive strength. As a result, the overall weight of the lower arm can decrease to provide a lightweight lower arm.



Furthermore, a seat back used by the present invention comprises: a seat back frame, which is integrally cast-formed and is fixed to the rear-lower arm portion so as to support an occupant; and, a woven spring member, which is formed of elastic fibers and is anchored to the seat back frame. In addition, the seat back frame comprises: a vertical wall portion, which extends along the outer periphery of the seat back frame; a plurality of spring-mounting members, which are provided inside the vertical wall portion so as to hold the woven spring member against the spring-mounting members; a working hole, which is punched between the vertical wall portion and the spring-mounting member so as to mount the woven spring member to the seat back frame; and, a reinforcing member, which increases the strength of the spring-mounting member.

According to the seat back with the above structure, a bar-shaped member such as an end portion of a screw driver is held against the working hole which is punched in the reinforcing member. With the bar-shaped member used as a fulcrum, a hooking portion on the woven spring member can be held against an interlocking member which is mounted to a spring-mounting seat. This step can provide improved operation in the combining of the woven spring member with the seat back frame. Furthermore, in the seat back frame, the spring-mounting seat and the vertical wall portion are connected together by the reinforcing member, thereby allowing the spring-mounting members on the seat back frame to have greater strength.

## BRIEF DESCRIPTION OF THE DRAWINGS

FIG. 1 is a perspective view as diagonally viewed from the front of a seat track of a vehicle seat according to a first embodiment of the present invention, showing an assembled state of the seat track,

FIG. 2 is a cross-sectional view taken along line 2—2 of FIG. 1,

FIG. 3 is a cross-sectional view taken along line 3—3 of FIG. 1,

FIG. 4A is a cross-sectional view taken along the line 4A—4A of FIG. 1, illustrating a lower end portion of a rear-reinforcing portion for the vehicle seat according to the first embodiment of the present invention,

FIG. 4B is a cross-sectional view taken along the line 4B—4B of FIG. 1, showing a lower end portion of a front-reinforcing member for the vehicle seat according to the first embodiment of the present invention,

FIG. 5 is a side view illustrating an assembled state of a seat track for a conventional vehicle seat,

FIG. 6 is a cross-sectional view taken along line 6—6 of FIG. 5,

FIG. 7A is a perspective view seen diagonally from the front of a seat back frame, which is used by the vehicle seat according to a second embodiment of the present invention,

FIG. 7B is a partially partial cross-sectional perspective view of a seat back frame shown in of FIG. 7A,

FIG. 8 is a cross-sectional view of a seat back frame showing a state of mounting a woven spring member to the seat back frame,

FIG. 9 is a descriptive illustration for mounting a woven spring member to the seat back frame, which is used by the vehicle seat according to the second embodiment of the present invention,

FIG. 10 is a perspective view seen diagonally from the front of the woven spring member of the vehicle seat according to the second embodiment of the present invention,

FIG. 11 is a perspective view seen diagonally from the front of a seat back frame of a vehicle seat according to another embodiment of the present invention,

FIG. 12 is a perspective view seen diagonally from the front of a seat back frame of a conventional vehicle seat,

FIG. 13 is a cross-sectional view taken along line 13—13 of FIG. 12,

FIG. 14 is a perspective view seen diagonally from the front of a seat back frame for another type of a conventional vehicle seat, and

FIG. 15 is a cross-sectional view taken along line 15—15 of FIG. 14.

## DESCRIPTION OF THE PREFERRED EMBODIMENTS

A first embodiment of a vehicle seat according to the present invention will now be described with reference to FIGS. 1 to 4.

Referring to FIG. 1, each lower arm 12 for a vehicle seat 10 according to the first embodiment is formed with: a front-lower arm portion 14, which forms a front portion of the lower arm 12; and, a rear-lower arm portion 16, which forms a rear portion of the lower arm 12. the rear-lower arm portion 16 is a member such as a press-formed iron plate, which has relatively great tensile strength and compressive strength. The front-lower arm portion 14 is a relatively lightweight member, for example, a press-formed product of light metal such as aluminum.

At a rear end portion of the rear-lower arm portion 16, components such as a ratchet 18, a pole 20, a spring 22, and a handle 24 are mounted to functionally serve as a reclining mechanism. A rear-reinforcing member 25 is formed of an aluminum-extruded material. Both end portions of the rear-reinforcing member 25 are bolted by bolts 27 to lower points of the rear end portions of the rear-lower arm portions 16 which are disposed at both sides of the vehicle seat 10. The rear-reinforcing member 25 thereby spans the rear end portions of both of the rear-lower arm portions 16.

A lower end portion of the rear-lower arm portion 16 is fixed by rivets 29 to a vertical wall portion 28A of an upper rail 28. The upper rail 28 and a lower rail 23 form a seat track 21. A base portion 28B of the upper rail 28 is swingably held against the lower rail 23 which is anchored to an unillustrated vehicle floor. On the rear-lower arm portion 16 which is disposed at the right of the vehicle seat 10, a lap belt 26 is mounted at a substantially central portion of the rear-lower arm portion 16 in the longitudinal direction of the vehicle seat 10. A lower end portion of the lap belt 26 is secured jointly to the vertical wall portion 28A of the upper rail 28 and the rear-lower arm portion 16 by means of a bolt 31.

A front end portion 16A of the rear-lower arm portion 16 reaches to a substantially central portion of the lower arm 12 in the longitudinal direction of the vehicle seat 10. A rear end portion 14A of the front-lower arm portion 14 extends to the same portion of the lower arm 12. The rear end portion 14A of the front-lower arm portion 14 is thereby overlaid with an outer side of the front end portion 16A of the rear-lower arm portion 16 in the transverse direction of the vehicle seat 10.

As shown in FIG. 2, the vertical wall portion 28A of the upper rail 28 is interposed between the front end portion 16A of the rear-lower arm portion 16 and the rear end portion 14A of the front-lower arm portion 14. A locking bracket 30 is held against an inner surface (toward the right in FIG. 2) of the front end portion 16A of the rear-lower arm portion 16. The front end portion 16A of the rear-lower arm portion 16, the rear end portion 14A of the front-lower arm portion 14, the vertical wall portion 28A of the upper rail 28, and the locking bracket 30 are secured together by a rivet 33.

Reference numbers 36, 38, and 41 in FIG. 2 represent a slide handle, a locking plate, and a seat track-equalizing wire respectively.

As illustrated in FIG. 1, a lower portion of the front-lower arm portion 14 is overlaid with an outer side of the vertical wall portion 28A of the upper rail 28 in the transverse direction of the vehicle seat 10. A front-reinforcing member 32, which is formed of an aluminum-extruded material, spans between front portions 14B of the front-lower arm portions 14 which are disposed at both sides of the vehicle seat 10. As can be seen from FIG. 3, one end of the front-reinforcing member 32 is secured by a bolt 34 jointly to the front portion 14B of the front-lower arm portion 14 and the vertical wall portion 28A of the upper rail 28. The front-reinforcing member 32 and the rear-reinforcing member 25 have respective bolted portions 32A and 25A (the latter being unillustrated). The bolted portions 32A and 25A are hollow at the time of extrusion molding; however, a threaded portion is then formed around an inner surface of each of the bolted portions 32A and 25A by way of after-processing.

As shown in FIG. 1, the lower arms 12 disposed at both sides of the vehicle seat 10 are connected together via the front-reinforcing member 32 and the rear-reinforcing member 25, thereby forming a frame structure. Referring to FIG. 4A and FIG. 4B, a lower end portion of the rear-reinforcing member 25 is processed to form a planar surface having a small cross-section in thickness. A lower end portion of the front-reinforcing member 32 is processed to form a groove having a substantially U-shaped cross-section. With this treatment, hooking members 48, which are fixed at both terminal end portions of a seat cover 46, can be anchored to the respective end portions of the rear-reinforcing member 25 and the front-reinforcing member 32. Furthermore, as seen from FIG. 1, cut-out-uprising portions 42 are provided in a predetermined place on respective inner surfaces of the front-lower arm portion 14, the rear-lower arm portion 16, and the locking bracket 30. A frame portion 40A for seat springs 40 is held against the cut-out-uprising portions 42.

The operations of the present embodiment will now be described.

With the above structure according to the present embodiment, a load imposed on the lower arm 12 of the vehicle seat 10 falls into three major categories: a load acting in the rear direction of the lower arm 12, which

is imparted from a seat back via a reclining mechanism; a tensile load, which is imparted from a seat belt via the lap belt 26; and, a load acting in the downward direction of the lower arm 12, which is imparted by an occupant's body weight via the seat springs 40. These loads are imparted chiefly to a rear portion of the lower arm 12, i.e., the rear-lower arm portion 16, and are then transmitted to a vehicle floor. The rear-lower arm portion 16, which is an iron plate member, thus acquires greater tensile strength and compressive strength, thereby allowing a load imposed on the rear-lower arm portion 16 to be transmitted to the vehicle floor satisfactorily. In addition, a front portion of the lower arm 12, i.e., the front-lower arm portion 14 is less sensitive to the above-described loads, and is formed of a light metal such as aluminum which has less tensile strength and compressive strength. The overall weight of the lower arm 12 can thereby be lessened to achieve a lightweight lower arm 12.

Furthermore, according to the present embodiment, the vertical wall portion 28A of the upper rail 28 extends upward so as to be fixed directly to the front-lower arm portion 14, the rear-lower arm portion 16, the front-reinforcing member 32, and the rear-reinforcing member 25 by means of rivets 33 and 29 and bolts 34 and 27. As a result, an entire outline of these members is formed into a rectangular shape, thereby allowing conventional cushion frames to be eliminated. Furthermore, a conveniently assembled structure is achieved by a step of bolting the front-reinforcing member 32 and the rear-reinforcing member 25 to adjacent members thereof. In addition, according to the present embodiment, the respective end portions of the front-reinforcing member 32 and the rear-reinforcing member 25 are processed to form a groove having a substantially U-shaped cross-section or a planar surface having a small cross-section in thickness. Both terminal end portions of a seat cover can thereby be fixed to the respective end portions of the front-reinforcing member 32 and the rear-reinforcing member 25. This processing eliminates a cover-setting plate 99 for fixing a terminal end portion of a seat cover, as shown in FIG. 5, which is provided in conventional constructions. As a consequence, a lightweight product which has greatly fewer components and involves less cost is now achievable.

The above structure according to the present invention provides improved operations in which a load imparted on the lower arm can sufficiently be transmitted to the vehicle floor. A lighter lower arm can also be attained.

Next, a seat back used on the vehicle seat according to the present invention will be described with reference to FIGS. 7A to 10.

Referring to FIG. 7A, a seat back frame 112 used on a seat back 110 of the vehicle seat according to the present embodiment is a high-back type, provided with a head restraint portion 114. The seat back frame 112 is molded out of metal including aluminum, magnesium, etc., by casts such as a die cast or the like.

A pair of reclining mechanism-mounting portions 116 are provided at opposite lower-end portions of the seat back 110 in the transverse direction of the seat back 110. Each of the reclining mechanism-mounting portions 116 has mounting holes 118 for the insertion of bolts and nuts, both of which are unillustrated. The seat back 110 is mounted to a reclining mechanism (not shown) which is disposed at a rear portion of an unillustrated seat cushion by means of the above-noted bolts and nuts.

A base portion 112A of the seat back frame 112, which supports the head, back, and waist of an occupant, includes: a frame portion 120; and, a plurality of beam portions 122, which span between opposite sides of the frame portion 120 in the transverse direction of the seat back 110. A vertical wall portion 124, which protrudes in the forward direction of the seat back 110, is formed on the outer periphery of the frame portion 120. Flanges 123 are formed along edge portions of the beam portions 122 on the inner periphery of the frame portion 120. Without interruption, the flanges 123 project at a substantially constant height in the forward direction of the seat back 110. The height L of the vertical wall portion 124 increases steeply at successively greater distances toward the head restraint portion 114 from the reclining mechanism-mounting portion 116. The vertical wall portion 124 then achieves its maximum height L1 at a location thereof which represents the waist of an occupant. Thereafter, height L gradually lessens as the head restraint portion 114 is approached. When the head restraint portion 114 is reached, height L is at minimum L2.

A pair of cover-fixing grooves 125 are formed on portions of the vertical wall portion 124 of the seat back frame 112 other than the head restraint portion 124. The cover-fixing groove 125 is formed by an end portion of the vertical wall portion 124 being bent into a U-shape in an outward direction of the seat back frame 112. As shown in FIG. 8, a plate-shaped interlocking strip 127A, which is secured to an end portion of a cover 127 for the seat back 110, is held against the cover-fixing groove 125.

Referring back to FIG. 7A, a side frame 126 is integrally formed with the seat back frame 112 in the vicinity of maximum height L1 of the vertical wall portion 124. The side frame 126 is of a lateral U-shape when viewed from the side thereof, with a curved portion of the side frame 126 directed in the forward direction of the seat back 110.

In addition, as illustrated in FIG. 11, the side frame 126 may also be separable from the seat back frame 112. In this case, the side frame 126 is formed as a bar member made of metal such as aluminum or magnesium. Pins 126A are formed at opposite end portions of the side frame 126 so as to be inserted through mounting holes 113 which are provided in the seat back frame 112. An end portion of a mounting leg 126B, which extends from a substantially central portion of the side frame 126, is then bolted into a threaded hole 117 of the seat back frame 112 by means of a bolt 115.

Referring back to FIG. 7A, a plurality of spring-mounting seats 130 are provided on the frame portion 120 of the base portion 112A of the seat back frame 112. Being spaced at predetermined intervals along the vertical wall portion 124, the spring-mounting seats 130 are formed on portions of the seat back frame 112 other than the head restraint portion 114. The spring-mounting seats 130 are integrally formed with the seat back frame 112.

As can be seen from FIG. 7B, a bolt hole 140 is located at a substantially central portion of the spring-mounting seat 130. A threaded portion is formed around a inner circumferential surface of the bolt hole 140. As shown in FIG. 8, a fluted bolt 142 is engaged into the threaded portion.

As illustrated in FIG. 10, a seat back cushion member is formed by using elastic fibers, as a woven spring member 144. At each end portion of the woven spring

member **144** in the transverse direction thereof, a spring-mounting bracket **146**, which is made of a hard steel wire, is mounted thereto by way of stitching or welding. Referring to FIG. **9**, the spring-mounting bracket **146** is provided with an interlocking portion **146A**, which is bent into a U-shape at a predetermined distance in a direction opposite from the woven spring member **144**. A portion of the woven spring member **144**, which is opposite the interlocking portion **146A**, is clipped in a rectangular form in a direction opposite from the interlocking portion **146A**, thereby forming a notched portion **146A**. In addition, as shown in FIG. **8**, the interlocking portion **146A** of the spring-mounting bracket **146** is held against a fluted portion **142A** of the fluted bolt **142**.

As illustrated in FIG. **8**, a first hub portion **132** is integrally formed with the spring-mounting seat **130** and the vertical wall portion **124** so as to connect therebetween. The first hub portion **132** thereby serves as a reinforcing member. The first hub portion **132** has an arc-shaped cross-section which draws a gradually convex curve in the downward direction of the seat back frame **112**. Referring to FIG. **7B**, a working hole **134** is punched at a substantially central portion of the first hub portion **132**. The working hole **134** has a concave portion having a rectangular cross-section. In addition, a second hub portion **136** is integrally formed with the spring-mounting seat **130** and a flange **123** so as to connect therebetween.

Next, the operation of the seat back in the present embodiment will be described.

Referring to FIG. **9**, according to the present aspect of the above-described structure, a bar-shaped member such as an end portion **148A** of a screw driver **148** is inserted through the interlocking portion **146A** of the spring-mounting bracket **146** of the woven spring member **144**. The end portion **148A** of the screw driver **148** is further inserted into the working hole **134** of the first hub portion **132** so as to be held against the working hole **134**. In this state (as illustrated in FIG. **9**), the screw driver **148** is rotated in an outward direction of the seat back frame **112** (in a direction of arrow A), with the end portion **148A** of the screw driver **148** used as a fulcrum. As shown in FIG. **8**, the interlocking portion **146A** of the spring-mounting bracket **146** can thereby be easily held against the fluted portion **142A** of the fluted bolt **142**, which is screwed in the spring-mounting seat **130**, independently of a tensile force from the woven spring member **144**. This step provides improved operativity in the combining of the woven spring member **144** with the seat back frame **112**.

In addition, in the seat back frame **112**, the spring-mounting seat **130** and the vertical wall portion **124** are connected together by the first hub portion **132**, thereby allowing the spring-mounting seat **130** on the seat back frame **112** to acquire greater strength.

Furthermore, according to the present embodiment, no holes are formed in an outer wall surface of the seat back frame **112**, unlike a configuration with a cut-out uprising portion for serving as a spring-interlocking portion **182**, as shown in FIG. **14**. Therefore, the seat back frame **112** can be designed to expose the outer wall surface thereof without detracting from a favorable appearance. In addition, according to the present embodiment, the seat back frame **112** is cast-formed, thereby allowing the spring-mounting seat **130** to be positioned freely and providing the woven spring member with an appropriate tensile force.

The present embodiment uses the seat back frame **112** of a high-back type which is provided with a head restraint portion **114**. In lieu thereof, a low-back type seat back frame having a separable head restraint portion may also be used.

The above-described structure according to the present invention provides improved operations in which: the woven spring member can be combined more operatively with the seat back frame; and, spring-mounting members on the seat back frame can acquire increased strength.

What is claimed is:

**1**. A seat frame for a vehicle comprising:

a front-lower arm;

a rear-lower arm, which is formed of a material having greater tensile strength and compressive strength than said front-lower arm, said rear-lower arm being overlaid with said front-lower arm so as to be fixed jointly to said front-lower arm;

a seat back frame, which is integrally cast-formed and is fixed to said rear-lower arm so as to support an occupant; and,

a woven spring member, which is formed of elastic fibers and is secured to said seat back frame,

wherein said seat back frame comprises:

a vertical wall portion, which extends along a periphery of said seat back frame;

a plurality of spring-mounting members which are disposed inside said vertical wall portion so as to engage with said woven spring member; and

a reinforcing member, which connects said vertical wall portion and each of said spring-mounting members for reinforcing the spring-mounting members,

a hole, which is used to mount said woven spring member on said seat back frame, being provided in said reinforcing member between said vertical wall portion and each of said spring-mounting members.

**2**. A seat frame for a vehicle according to claim **1**, wherein a rear end portion of said front-lower arm is secured to a front end portion of said rear-lower arm by means of a rivet.

**3**. A seat frame for a vehicle according to claim **1**, wherein said front-lower arm is a press-formed light metal product.

**4**. A seat frame for a vehicle according to claim **1**, wherein said rear-lower arm is a press-formed iron plate product.

**5**. A seat frame for a vehicle according to claim **1**, wherein said front-lower arm is formed by a pair of front-lower arm members, and said rear-lower arm is formed by a pair of rear-lower arm members,

a front-reinforcing member being provided at a vicinity of a front end portion of said pair of front-lower arm members, and connecting said pair of front-lower arm members; and

a rear-reinforcing member being provided at a vicinity of a rear end portion of said pair of rear-lower arm members, and connecting said pair of rear-lower arm members,

wherein a lower frame member is formed by said front-lower arm, said rear-lower arm, said front-reinforcing member, and said rear-reinforcing member.

**6**. A seat frame for a vehicle according to claim **5**, wherein said front-reinforcing member is bolted to said pair of front-lower arm members.

7. A seat frame for a vehicle according to claim 6, wherein one end of said front-reinforcing member is formed with a groove having a substantially U-shaped cross-section, a terminal end portion of a seat cover, which forms a covering for said vehicle seat, being fixed to said groove.

8. A seat frame for a vehicle according to claim 5, wherein said rear-reinforcing member is bolted to said pair of rear-lower arm members.

9. A seat frame for a vehicle according to claim 8, wherein one end of said rear-reinforcing member is formed with a planar surface having a thin cross-section, a terminal end portion of a seat cover, which forms a covering for said vehicle seat, being fixed to said planar surface.

10. A seat frame for a vehicle according to claim 1, wherein each of said spring-mounting members has an interlocking member which engages with said woven spring member.

11. A seat frame for a vehicle according to claim 10, wherein each of said spring-mounting members has a spring-mounting seat to which said interlocking member is mounted.

12. A seat frame for a vehicle according to claim 11, wherein said woven spring member has hooking members at opposite end portions thereof in a transverse direction of said woven spring member, each of said hooking members engaging with said spring-mounting seats.

13. A seat frame for a vehicle according to claim 11, wherein said reinforcing member is integrally formed with said vertical wall portion and said spring-mounting seat.

14. A seat frame for a vehicle according to claim 13, wherein said reinforcing member has said hole at a substantially central portion thereof.

15. A seat frame for a vehicle according to claim 11, wherein said spring-mounting seat has an interlocking member-mounting hole, said interlocking member being provided in said interlocking member-mounting hole so as to be freely engaged therein.

16. A seat frame for a vehicle comprising:

a seat back frame, which is cast-formed and is fixed to a rear-lower arm portion so as to support an occupant; and,

a woven spring member, which is formed of elastic fibers and is fixed to said seat back frame,

wherein said seat back frame comprises:

a vertical wall portion, which extends along a periphery of said seat back frame;

a plurality of spring-mounting seats, which are disposed inside said vertical wall portion and mount interlocking members to said spring-mounting seats, so that said woven spring member engages with said interlocking members; and,

a reinforcing member, which connects said vertical wall portion and each of said spring-mounting seats, for reinforcing said spring-mounting seats,

a hole, which is used to mount said woven spring member on said seat back frame, being provided in said reinforcing member between said vertical wall portion and each of said spring-mounting seats.

17. A seat frame for a vehicle according to claim 16, wherein said woven spring member has hooking members at opposite end portions thereof in a transverse direction of said woven spring member, said hooking members engaging with said interlocking members.

18. A seat frame for a vehicle according to claim 17, wherein said hooking members are a metal wire.

19. A seat frame for a vehicle according to claim 17, wherein said hooking members are sewed or welded to said woven spring member.

20. A seat frame for a vehicle according to claim 16, wherein said reinforcing member is integrally formed with said vertical wall portion and each of said spring-mounting seats, said reinforcing member having said hole at a substantially central portion thereof.

21. A seat frame for a vehicle according to claim 16, wherein each of said spring-mounting seats has an interlocking member-mounting hole, each of said interlocking members being provided in said interlocking member-mounting hole so as to be freely engaged therein.

* * * * *

Translation (for only the specification of Japanese Laid-Open U.M. Pub. No. 57-81662)

1. Title of Invention :

Seat Back Frame Structure

2. Scope of Claim for Utility Model registration:

A seat back frame structure formed from a synthetic resin material, characterized in that a boss portion (8) is defined integrally in an upper part of seat back frame , wherein said boss portion is formed with an headrest stay insertion area opened in the upper side thereof.

(Translator's note: the designation (8) is inserted for clarity, because the wording "boss portion" does not appear in the detailed descriptions hereinafter, but it only appears at the last portion of this specification on Page 5 relating to the explanation of reference numerals in the figures, which reads as follows " numeral (8) refers to a boss portion which forms the headrest guide portion". So, the boss portion corresponds to the headrest guide portion (8 or 18) defined in the descriptions.)

3. Detailed Description of the Invention

The present invention relates to a seat back structure formed from a synthetic resin material, which is adapted for use in vehicle seat unit.

In forming a seat back frame for vehicle seat unit, there has been increasing demands for its weight reduction, mass production and cost diminishment. To meet such demands, it has been proposed to employ a synthetic resin material for producing the seat back frame. A typical example of the synthetic resin material includes a fiber reinforced plastics containing elongated

fibers therein, such as glass fibers.

Among the known seat back frames of this kind, there has been a seat back frame of the type wherein a headrest can be installed in a vertically adjustable manner. Fig. 5 shows such type of conventional seat back frame (50) including a headrest mounting portion which allows a headrest (54) to be installed therein. This headrest mounting portion is defined by integrally bonding a separate guide member (53) of generally channel cross-section, as by fusing, to the upper area of backrest plate section (51) of the seat back frame. The backrest plate section is surrounded by an upstanding piece (52) which erects in a direction forwardly of the seat back frame. This conventional headrest mounting portion, however, has suffered from a high cost raise since it requires forming of such separate body of guide member (53) and a labor for bonding it to the seat back frame, which results in a troublesome and complicated assemblage of the seat back frame itself as well as an increase of parts and fittings therefor.

In order to avoid the foregoing drawbacks of conventional seat back frame, we have made the present invention, and the purpose thereof is to provide a seat back frame structure wherein a headrest guide is integrally formed in a seat back frame, thereby eliminating the steps of bonding the headrest guide to the frame so as to achieve reduction of parts and costs involved.

Hereinafter, description will be made of one preferred embodiment of the present invention, with reference to the annexed drawings.

Fig. 1 is a perspective view of a seat frame. Designation (1) denotes a seat cushion frame. This seat cushion frame (1) is provided with a seat cushion (2) on the upper surface thereof and also provided with a pair of seat rails (3)(3) laterally of the bottom side thereof. Designation (5) denotes a seat back frame which is operatively connected via a reclining device (4) with the seat cushion frame (1).

In forming the seat back frame (5), a base material used is a fiber reinforced plastics containing therein elongated fibers such as glass fibers. In operation, for instance, a stamping may be employed to form and shape such fiber reinforced plastics material into a given shape of seat back frame. The seat back frame (5) so formed has a generally flat body (6) and an upstanding piece (7) defined in the upper, left and right sides of the body (6). The upstanding piece (7) projects from the body (6) in a direction forwardly of the frame (5) and is

not defined in the lower side of that body (6). That is, both generally flat body (6) and upstanding piece (7) are fomred integrally together, such that the projected piece (7) continously extend along the upper, left and right edges of the body (6), thus circumscribing those edges to assume an inverted-U-shaped configuration.

In the upper portion (7a) of the thus-formed upstanding piece (7), a headrest guide portion (8) is integrally formed such as to be disposed midway in the longitudinal direction of the upper portion (7a). According to the illustrated embodiment, the headrest guide portion (8) protrudes in a direction forwardly of the frame (5), having a solid body whose thickness is equal to the width of upper portion (7a). Further, the headrest guide portion (8) is situated at the upper area of generally flat body (6) and adjoins integrally to that particular body (6) and the upper portion (7a). The headrest guide portion (8) includes: an insertion hole (8a) opened in the upper portion (7a) of upstanding peice (7); a space (8b) which is defined below the insertion hole (8a) and commnuicates therewith; and a hole (8d) formed in the bottom wall (8c). The insertion hole (8a) and the hole (8d) are respectively situated at the upper and lower sides of headrest guide portion (8). One opening (8e) is defined rearwardly of the insertion hole (8a), and another opening (8f) also defined rearwardly of the hole (8d). Those two openings (8e) (8f) are so defined as to face to both foreward and rearward sides of headrest guide portion (8). In addition, still another opening (8g) is defined in the forward side of headrest guide portion (8). Thus, it is seen that one set of the openings (8e) (8f) and the aforesaid opening (8g) are respectively situated rearwardly and forwardly of the headrst guide portion (8). All those openings (8e) to (8g) communicate with the space (8b). But, the purpose of those openins (8e) to (8g) is merely to facsiliate the ease of removing dies from the resultant seat back frame, and thus, they should not necessarily be formed . An adjustment stopper element (9), such as a resilient stopper spring, is securely attached on the right and left inner walls of headrst guide portion where the space (8b) is defined, or attached on at least one of those two inner walls. A stay (10a) of headrest (10), which is inserted through the insertion hole (8a), space (8b) and lower hole (8d), is formed with notches (10b ...) in both lateral sides thereof. Since the notches (10b...) may be selectively engaged over the aforesaid adjustment stopper element (9), it is possible to adjustably lock the headrest

(10) at a desired level.

The above-constructed seat back frame (5) is covered with a cushion material and upholstery on both forward and rearward sides thereof as well as on the peripheral lateral sides thereof, whereupon a seat back is obtained.

Fig. 4 shows another alternative embodiment, according to which, the whole of seat back frame (15) is so formed to assume an inverted-U-shaped shape having an opening formed centrally thereof, whereby there is produced a seat back frame body (16). The seat back frame body (16) is thus formed with a pair of vertically extending right and left frame members (16b) (16b) and provided with a separate crossbar member (17) securely connected between the two lower end portions respectively of those two frame members (16b). An upper crossbar member (16a) is so integrally formed in the frame body (16) as to bride over two upper end portions respectively of the two frame members (16b). A headrest guide portion (18) is integrally formed in such upper crossbar member (16a). The headrest guide portion (18) has a space area (18a) defined therein, which provides openings in the upper, forward and rearward sides of the headrest guide portion. A holder (21), which has a flange portion (21a) formed at the upper end thereof, is inserted and secured in the space area (18a). It is so arranged that a stay (20a) of headrest (20) is inserted in the holder (21) and may be adjustably moved therein in the vertical direction thereof.

While having described the embodiments of the present invention, it is of course possible to modify the specific structure of the headrest guide portion in any other desired manner. For example, the adjustment stopper element may not be provided in the headrest guide portion, and instead thereof, such embodiment as in Fig. 4 may be adapted.

As appreciated from the foregoing descriptions, in accordance with the present invention, the headrest guide portion is integrally formed in the seat back frame, and therefore, there is eliminated the conventional need for mounting a separate headrest guide portion in the frame, so that it is possible to reduce the assembling steps and achieve an easy production of resulting seat back. Further, in addition to diminishing the number of required parts and costs involved, there may be many advantageous aspects attained, not to mention an increased structural strength of frame due to the integral formation of the headrest guide portion and incidental weight

reduction of frame.

4. Brief Description of the Drawings

The annexed drawings show preferred embodiments by way of example. Fig. 1 is a perspective view of seat frame; Fig. 2 is a vertically sectional view of a headrest guide portion in a seat back frame; Fig. 3 is a cross-sectional view taken from the Fig. 2; Fig. 4 is a perspective view of another alternative embodiment; Fig. 5 is a perspective view of conventional seat back frame; and Fig. 6 is a cross-sectional view taken from the Fig. 5.

In the figures, numeral (5) refers to a seat back frame, numeral (8) refers to a boss portion which forms the headrest guide portion, numeral (10) refers to a headrest, and numeral (10a) refers to a stay of the headrest.

312
510

⑲ 日本国特許庁（JP）　⑪実用新案出願公開

⑫ 公開実用新案公報（U）　昭57—81662

| ⑤1Int. Cl.³ | 識別記号 | 庁内整理番号 | ④3公開　昭和57年(1982) 5 月20日 |
|---|---|---|---|
| A 47 C 7/40 | | 6417—3B | |
| 7/38 | | 6417—3B | |

審査請求　有

D

（全 2 頁）

# ⑤4シートバツクフレーム構造

⑦2考 案 者　麻生邦夫
志木市柏町５－７－14

⑦1出 願 人　本田技研工業株式会社
東京都渋谷区神宮前６丁目27番８号

⑦1出 願 人　東京シート株式会社
朝霞市栄町３丁目７番27号

⑦4代 理 人　弁理士　下田容一郎　外１名

②1実　願　昭55—160558
②2出　願　昭55(1980)11月10日

⑦2考 案 者　松島正秀
川越市五味ケ谷540—23

⑦2考 案 者　本藤三幸
東京都杉並区清水１—20—７

## ⑤7実用新案登録請求の範囲

合成樹脂で成形したシートバツクフレームにおいて、シートバツク上部にこれと一体にボス部を設け、該ボス部には上に開口するヘツドレストのステー挿入部を設けるようにしたことを特徴とするシートバツクフレーム構造。

## 図面の簡単な説明

図面は本考案の一実施例を示すもので、第１図はシートフレームの斜視図、第２図はシートバツクフレームのヘツドレストガイド部の縦断面図、第３図はこれの横断平面図、第４図は変更実施例の斜視図、第５図は従来例の斜視図、第６図はこれの要部の横断平面図である。

尚図面中５はシートバツクフレーム、８はヘツドレストガイドであるボス部、８aは挿入部、１０はヘツドレスト、１０aはヘツドレストステーである。

第４図

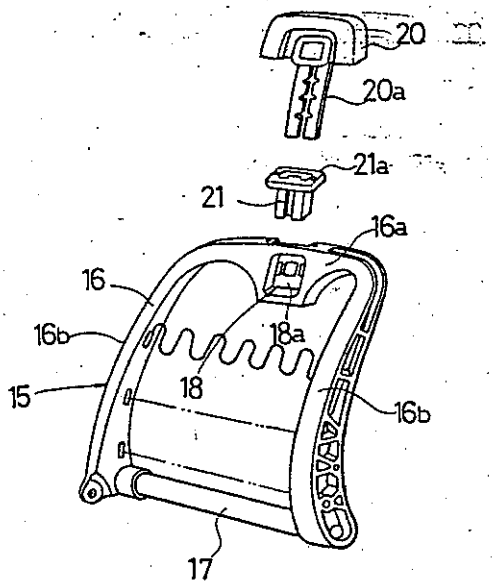


第５図

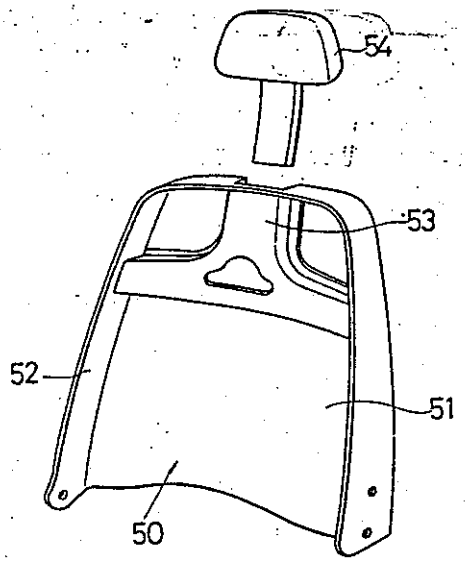

第1図

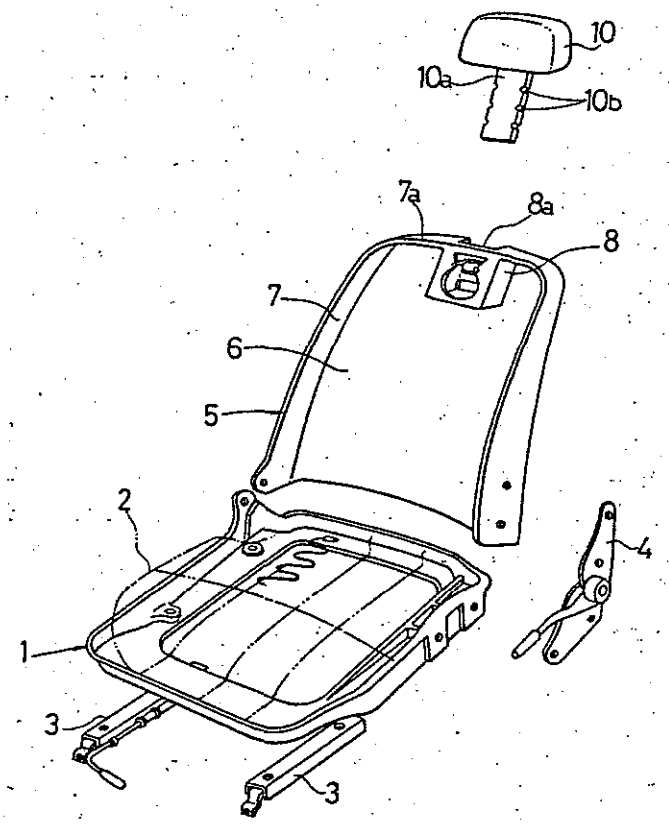


第2図

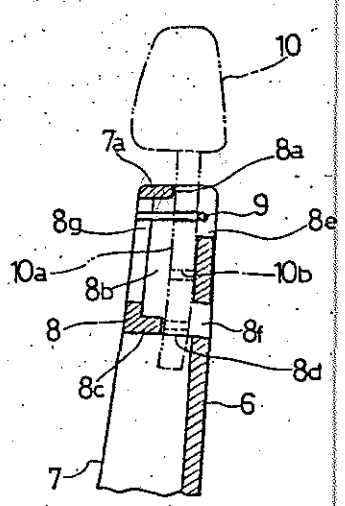


第3図

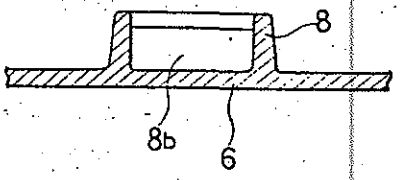


第6図

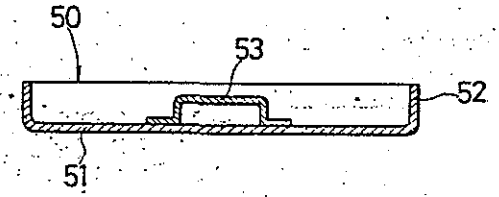

明　　細　　書

1. 考案の名称

シートバツクフレーム構造

2. 実用新案登録請求の範囲

合成樹脂で成形したシートバツクフレームにおいて、シートバツク上部にこれと一体にボス部を設け、該ボス部には上に開口するヘツドレストのステー挿入部を設けるようにしたことを特徴とするシートバツクフレーム構造。

3. 考案の詳細な説明

本考案は車両のシート装置に用いられる合成樹脂製シートバツクフレーム構造に関するものである。

車両のシート装置を構成するシートバツクのフレームは軽量化、量産化、コストダウンの要請から合成樹脂製のものが提案され、実用化されている。素材としてはガラス繊維等の長繊維を含有する繊維強化プラスチツク等が用いられている。

かかるシートバツクフレームには上下方向に調節可能にヘツドレストが設けられ、従来は第5図



81662

h.../20000616104851674897.gif&N0703=1&N0704=0E_Z%3e%3c%3a8%3f7%3e99=////// 00/06/16

の如くシートバツクフレーム５０の前方への起立片５２で囲まれる背板部５１上部に略チヤンネル断面の別体で成形したガイド部材５３を溶着等で接合一体化し、ヘツドレスト５４の取付部を形成している。かかる従来のヘツドレストの取付構造は、ヘツドレストガイドが別体で成形され、シートバツクフレームに接合する必要があるため、シートバツクフレームの組立が面倒、煩雑であること、部品点数が多くなること、上記に伴つてコストが高くなること等の不利がある。

本考案者は以上の如きシートバツクフレームの不都合を改善すべく本考案をなしたもので、その目的とする処は、シートバツクフレームにヘツドレストガイドを一体成形により設け、ヘツドレストガイド取付作業の省略、部品点数の削減、コストダウン等を図るようにしたシートバツクフレーム構造を提供するにある。

次に本考案の好適一実施例を添付図面に従つて詳述する。

第１図はシートフレームの斜視図で、１はシー



h.../20000616105056414371.gif&N0703=1&N0704=0E_Z%3e%3c%3a8%3f7%3e99=////// 00/06/16

トクツションフレームを示し、フレーム1上にはシートクツション2が設けられ、又下面左右にはシートレール3，3が取り付けられる。5はシートバツクフレームで、シートバツクフレーム5はリクライナ4を介してシートクツションフレーム1と連結される。

シートバツクフレーム5はガラス繊維等の長繊維を含有した繊維強化プラスチツクによりスタンピング成形等で成形される。フレーム5は略フラツトな本体6と、これの下辺を除いた左右、上辺に前方へ突出した起立片7とを備える。本体6と起立片7とは一体に成形され、起立片7は本体6の左右端縁、上端縁を囲む如く連続して逆U字型に設けられる。

以上の起立片7の上部7aの左右方向の中間部にはヘツドレストガイド部8を一体に成形する。実施例ではガイド部8は上部7aの前後方向と同様で前方に突出し、且つ本体6の上部中央で本体6と上部7aと一体に連続する。ガイド部8は起立片7の上部7aに開口する挿入口8aと、この



h.../20000616105331276577.gif&N0703=1&N0704=0E_Z%3e%3c%3a8%3f7%3e99=////// 00/06/16

挿入口８ａに続く下方への空間８ｂと、底８ｃに設けられた開口８ｄとを備える。上部の挿入口８ａの後方及び下部開口８ｄの後方は前後方向に開口８ｅ，８ｆされ、又ガイド部８の前面に開口８ｇが設けられ、前後の開口８ｅ～８ｇは空間８ｂと連通し、かかる開口８ｅ～８ｇは型抜きの都合上設けられ、開口８ｅ～８ｇは必ずしも必要ではない。空間８ｂの左右の内壁、或は少くとも一方の内壁にはバネ等からなる節度部材９が付設され、挿入口８ａから空間８ｂ、下部開口８ｄに挿入されるヘツドレスト１０のステー１０ａ側縁に設けた凹部１０ｂ…と選択的に節度部材９は係合し、所定調節高さでヘツドレスト１０を保持する。

以上のシートバツクフレーム５は全面及び周囲をクツション材及び外被材で覆い、シートバツクを得る。

第４図は変更実施例で、シートバツクフレーム１５を正面逆Ｕ字状で、中間部を空間とした本体１６と、本体１６の縦の左右のメンバ１６ｂ，



h.../2000061610584334905 4.gif&N0703=1&N0704=0E_Z%3e%3c%3a8%3f7%3e99=////// 00/06/16

１６ｂ下部間に横架止着された別体で成形されるクロスメンバ１７とからなり、本体１６の左右のメンバ１６ｂ，１６ｂ上端を繋ぐ上部クロスメンバ１６ａにヘツドレストガイド部１８を一体成形で設ける。ヘツドレストガイド部１８は上方に開口し、前後に開口した空所１８ａを備え、空所１８ａに上端にフランジ部２１ａを備えたホルダ２１を挿入固定し、ヘツドレスト２０のステー２０ａを高さ方向可調節的に挿入する。

以上実施例について詳述したが、ヘツドレストガイドの具体的構造は任意であり、又ヘツドレストガイドに直接に可調節係止部を設けることなく第４図の如き構造としても良い。

以上で明らかな如く本考案によれば、シートバツクフレームにヘツドレストガイド部を一体成形で設けるようにしたため、ヘツドレストガイド部の従来の如き組着作業を必要とせず、工程の省略、シートバツクの製作の容易化を図ることができ、又部品点数の減少を図り、コストダウンを図ることができる他、ヘツドレストガイド部の一体成形



h.../20000616105958673477.gif&N0703=1&N0704=0E_Z%3e%3c%3a8%3f7%3e99=////// 00/06/16

により強度上も好ましく、軽量化の点でも好都合である等多大の利点を有する。

4. 図面の簡単な説明

図面は本考案の一実施例を示すもので、第1図はシートフレームの斜視図、第2図はシートバックフレームのヘッドレストガイド部の縦断面図、第3図はこれの横断平面図、第4図は変更実施例の斜視図、第5図は従来例の斜視図、第6図はこれの要部の横断平面図である。

尚図面中5はシートバックフレーム、8はヘッドレストガイドであるボス部、8aは挿入部、10はヘッドレスト、10aはヘッドレストステーである。

実用新案登録出願人　本田技研工業株式会社
同　東京シート株式会社
代理人 弁理士　下田容一郎
同 弁理士　大橋邦彦



h.../20000616110116335706.gif&N0703=1&N0704=0E_Z%3e%3c%3a8%3f7%3e99=////// 00/06/16

# 第 1 図

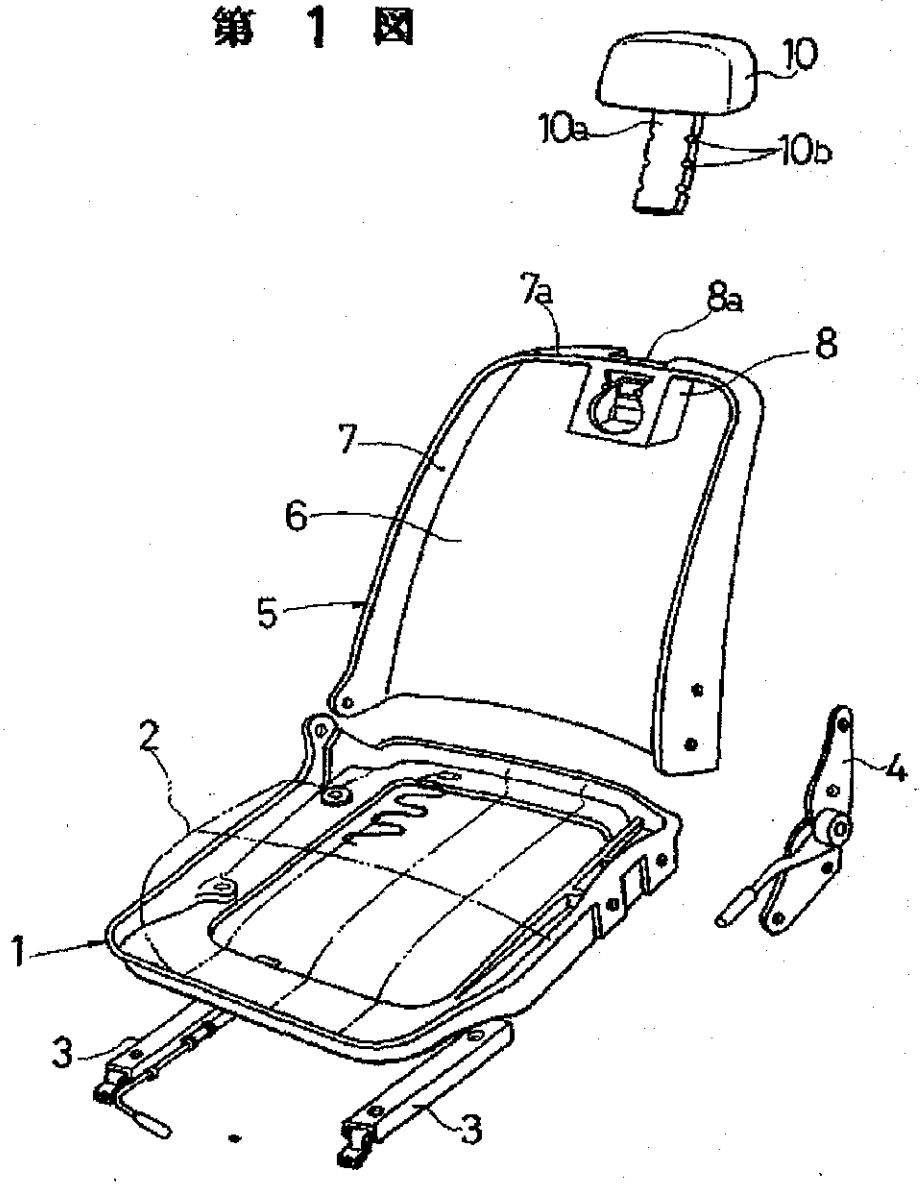




h.../20000616110225346173.gif&N0703=1&N0704=0E_Z%3e%3c%3a8%3f7%3e99=////// 00/06/16

第 2 図

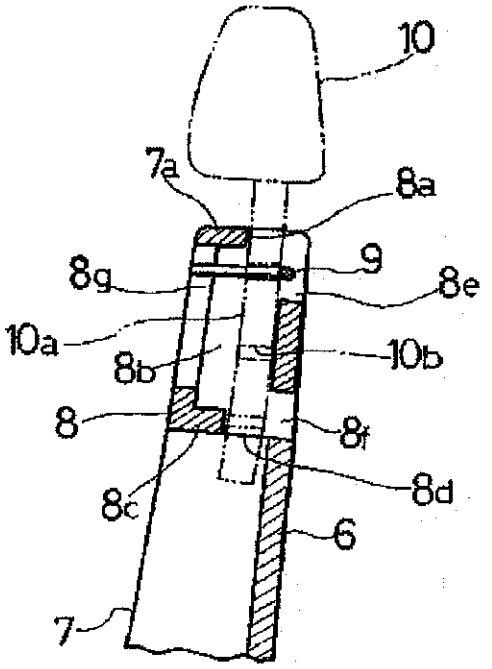


第 3 図

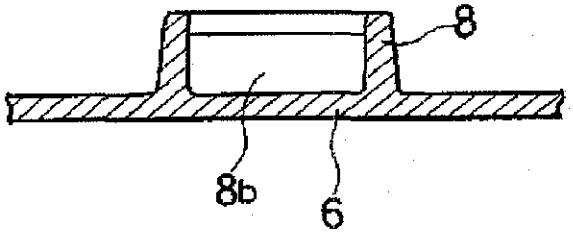




h.../20000616110330950415.gif&N0703=1&N0704=0E_Z%3e%3c%3a8%3f7%3e99=////// 00/06/16

# 第 4 図

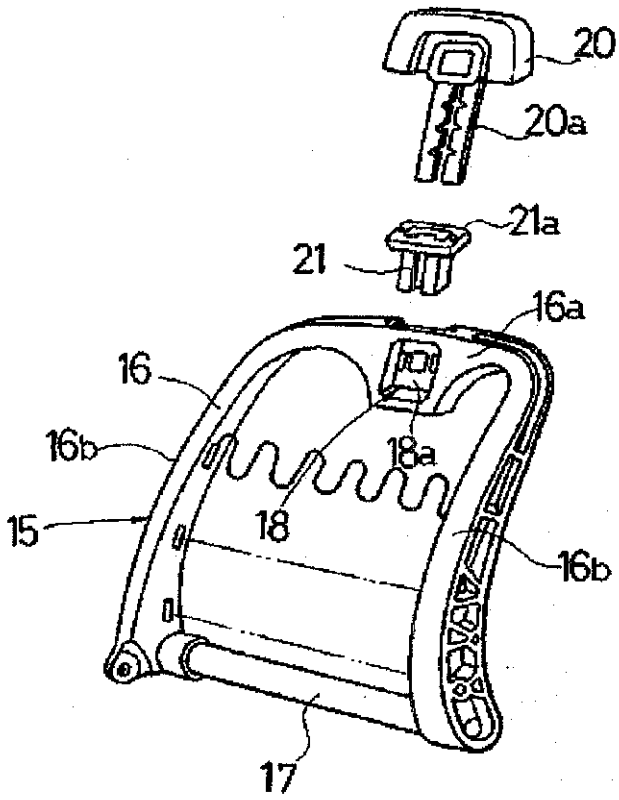




h.../20000616110456960522.gif&N0703=1&N0704=0E_Z%3e%3c%3a8%3f7%3e99=////// 00/06/16

第 5 図

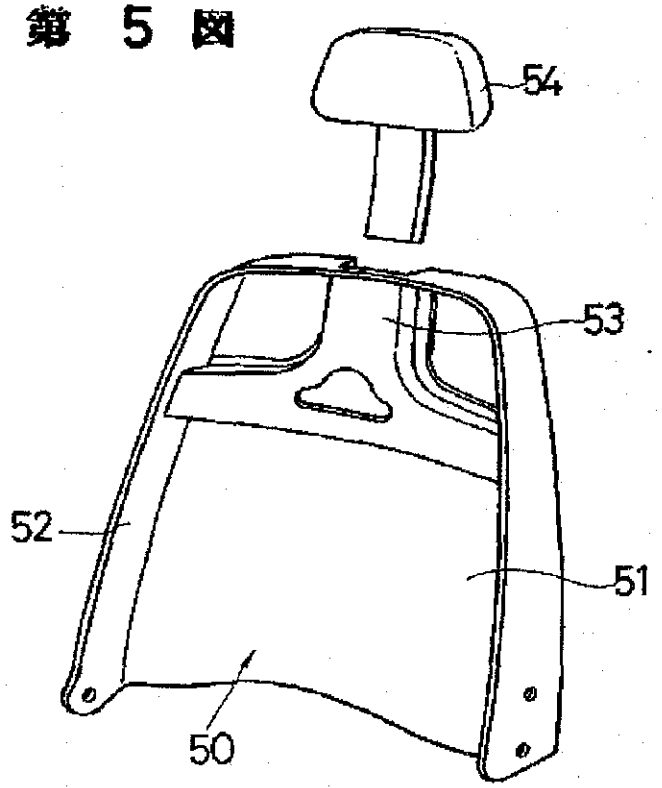


第 6 図

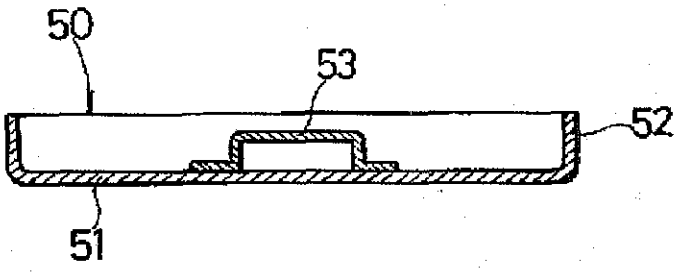




h.../20000616110614406066.gif&N0703=1&N0704=0E_Z%3e%3c%3a8%3f7%3e99=////// 00/06/16