A

Accuracy and Care in Manipulation

In the examples of experiments I have discussed so far, I have occasionally referred to the improvement of technique and to the achievement of accuracy. **J. J. Berzelius** transformed chemical experimentation, not so much by the introduction of novel apparatus or instruments, but by practising and teaching a degree of meticulousness in experimental manipulation that set quite new standards for chemical procedures.

'stuffs'. The principle assumed in Faraday's experimental proofs must be something like this: if several apparently different causes have exactly similar effects, both qualitative and quantitative, they must really be one and the same. To bridge the gap between the two principles, so that proof of the latter can be treated as disproof of the former, a third principle needs to be introduced, associating causes with active productive forces or powers. With this qualification the second principle can be treated as implying that the range of test effects is all produced by the same active power. Only so modified does the principle cast doubt on the first assumption.

Further reading

Faraday, M., *Experimental Researches in Electricity, 1839–1855*, 3 vols., Everyman edn., London, 1951.

Pearce Williams, L., *Michael Faraday*, London, 1965.

quantities of electricity, measured by the time of action for the voltaic form, and the number of turns on the machine for the common. So he concludes, '. . . it is probable that for all cases, that the *chemical power, like the magnetic force is in a direct proportion to the absolute quantity of electricity* which passes.'

Subsequent developments

Though it was generally agreed that Faraday had amply demonstrated the unity of electricities, the full theoretical understanding of the experiments was lacking. It was not until the electron theory of electricity was proposed in 1897 by J. J. Thomson that the underlying explanation of these results was finally established. An electron was supposed to be a basic atom of electricity, each electron having equal electric charge. All the different methods for producing electricity were really methods for releasing streams of electrons. The number of elementary charges released determined the quantity of electricity and their rate of passage, the current. The chemical decomposition produced by the passage of electricity is an aggregate of atomic events, each of which involves the exchange of one or a small, fixed number of electrons. If this is so, the total chemical effect of the passage of electricity must be proportional to the quantity of electricity that passes, however it is produced, since it is nothing but a stream of identical electrons. Similar explanations have been found for all the common effects and common measures that Faraday collated from the work of others or demonstrated for himself.

The reasoning behind the form taken by the experimental series is quite complex. The basic principle at stake is the assumption that different modes of production yield different

indicates that though it has not been observed it is very probable that it does exist.

	Physiological effect	Magnetic deflection	Magnets made	Spark	Heating power	True chemical action	Attraction and repulsion	Discharge by hot air
1. Voltaic electricity	×	×	×	×	×	×	×	×
2. Common electricity	×	×	×	×	×	×	×	×
3. Magneto-electricity	×	×	×	×	×	×	×	
4. Thermo-electricity	×	×	+	+	+	+	+	
5. Animal electricity	×	×	×	+	+	×		

The identity of electricities: quantitative proof

But all this is only the first stage of the experimental series. It still remains to determine whether the electricities can be demonstrated to be quantitatively identical as well, that is whether the same amount, according to some common measure, is required to produce quantitatively identical effects. By way of preparation Faraday had to devise a common measure of quantity. To test the ability of a galvanometer to register the quantity of electricity regardless of its source and circumstances of discharge Faraday set up different sized groups of jars, but in each group stored the same amount of electricity. He determined that the amount stored was the same by using the same number of rotations of the electrical machine for each set. Though the electric tension was different in each case,

connection between the source of common electricity (a set of jars connected to a generating machine), he was able to achieve his aim. 'Finally when the battery had been positively charged by about forty turns of the machine, it was discharged by the rod and the thread through the galvanometer. The needle immediately moved.' By slowing down the rate with which it was discharged Faraday showed that common electricity behaved very much like the voltaic electricity produced chemically.

Summarizing the results of other small studies Faraday covered the cases of magneto-electricity, that produced by electromagnetic induction, and animal electricity. The case of thermo-electricity, that produced by heating the junction between two dissimilar metals, was more troublesome because of the quantitatively small scale of the effect. The phenomenon had been discovered by T. J. Seebeck in 1822. Electrostatic effects, heating effects and the power to decompose solutions had not been demonstrated for this form of electricity. By a nice piece of analogical reasoning Faraday disposed of the problem this posed for his doctrine of the unity of electricities. He had already shown that the differences between common and voltaic electricity could be explained by the very high intensity of the former. Perhaps thermo-electricity seems different only because of its very low intensity. 'Only those effects are weak or deficient,' he says, 'which depend upon a certain high degree of intensity; and if common electricity be reduced in that quality to a similar degree with the thermo-electricity, it can produce no effects beyond the latter.'

The results of the whole study of the qualitative identity of electricities are summed up in the accompanying table, taken from Faraday's *Experimental Researches*. The sign '×' means that the effect has been experimentally established, while '+'

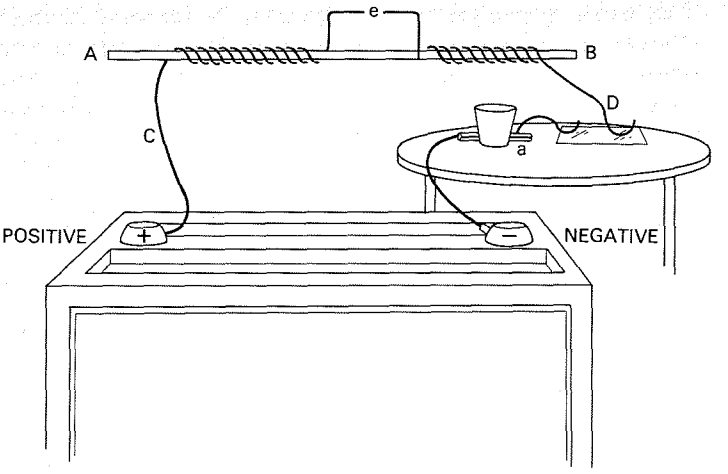

Fig.34. The apparatus for demonstrating a discharge of voltaic electricity.

pole of a voltaic battery, and the wire D with a decomposing apparatus from which the communication was completed to the negative pole of the battery. In these experiments only two troughs, or twenty pairs of plates, were used.

'Whilst in the state described no decomposition took place at the point *a*, but when the side of a spirit lamp flame was applied to the two platina extremities at *e*, so as to make them bright red-hot, decomposition occurred; iodine soon appeared at the point *a*, and the transference of electricity through the heated air was established.' It was well known that voltaic electricity would produce all the other effects of Faraday's list. So the first step had been taken.

that it can flow as a current. If it can be shown to be capable of flowing, then all the typical effects of electrical motion can be expected.

The experimental series

To prove that voltaic electricity can take the form of a current Faraday could have used a galvanometer, an instrument for detecting an electric current. But much more sensitive devices can be constructed. Electric currents will decompose compound substances which have been dissolved in water, even if the current is very weak. By choosing a compound, one of whose constituents becomes visible when released, even if only a little is freed, Faraday devised a very sensitive detector of electric currents.

He had demonstrated in some earlier studies that currents can flow across air-filled gaps in electrical circuits, when the air is heated. The apparatus to test whether voltaic electricity could flow as a current consisted essentially of a battery, as a source of voltaic electricity, connected to a circuit which included an air-filled gap. When the air in the gap is heated a current should pass immediately, if voltaic electricity could indeed produce one. Here is how Faraday describes the experiment: 'As heated air discharges common electricity with far greater facility than points, I hoped that voltaic electricity might in this way also be discharged. An apparatus was therefore constructed in which AB is an insulated glass rod upon which two copper wires, C, D are fixed firmly; to these wires are soldered two pieces of fine platina wire, the ends of which are brought very close to each other at *e*, but without touching; the copper wire C was connected with the positive

His family life seems to have been very similar to that of his parents. He married another member of the Sandemanian congregation, Sarah Bernard, in 1821. Faraday seems to have been rather a jolly man amongst his intimates. He was devoted to strenuous physical exercise, walking great distances, and he was one of the first bicyclists. But like many of the most active thinkers of that time, he suffered a severe mental breakdown in mid-life. He never fully recovered. His memory began to fail and he had to have recourse to all kinds of devices to keep track of events even in the course of a single morning. In 1858 Queen Victoria provided him with a home near Hampton Court, to which he retired in 1862. His last years were spent quietly, since his capacity for active scientific work had completely gone. He died in 1867.

The problem of the identity of electricities: qualitative preliminaries

In his *Experimental Researches*, Series III, paragraphs 265 to 378, Faraday describes the masterly series of experiments he undertook to determine whether the superficially distinct forms of electricity were merely different manifestations of a common underlying unity. In a sense Faraday already knew, before he undertook the very first experiment, that there was really only one basic electricity. His metaphysics of nature allowed him no other conclusion. But metaphysical conviction is worthless without empirical demonstration.

Why had anyone supposed that there were many electricities? The argument depended on the presumption that if superficially similar effects were produced by quite different processes they must really be caused by quite different underlying entities, whatever these might be. As Faraday

just before Michael's birth. Though the family were poor they seemed to have been remarkably close and contented. They were Sandemanians, and the strength of their family life must have had something to do with the intensity of their religious convictions. Michael Faraday was a Sandemanian preacher all his life. The sect had originated in Scotland. Sandemanians hoped to bring about the separation of Church and State, and to reconstitute all the early Christian forms of worship, including the 'love' feast, a substantial communal meal. God was thought to be an active being, working in the world. They favoured a naturalistic proof of His existence through the contemplation of nature.

At the age of fourteen Michael Faraday was apprenticed to a bookbinder. In working at this trade he acquired both manual dexterity and a passion for knowledge, since he read the books he was set to bind. In his spare time he attended courses at the City Philosophical Society. He came to the notice of Humphry Davy, serving the injured Davy as an amanuensis. Shortly afterwards he was taken on as an assistant by Davy, at the Royal Institution. Davy and his wife travelled extensively on the continent. Faraday went with them, officially as Davy's scientific assistant, but to his great resentment was treated more like a valet by Lady Davy.

In 1825 he was elected Director of the Laboratory at the Royal Institution. His astonishing capacity for sustained experimental work was coupled with a powerful vision of the basic workings of nature. From Davy he had absorbed the idea of the world as a structured whole, formed by continuously interacting natural agents or powers. With this theory to guide his studies he was soon in the forefront of the sciences of chemistry and physics.

D

The Demonstration of Underlying Unity within Apparent Variety

Complementary to the kind of project described in the last section, an experimentalist might set about trying to show that some apparently diverse collection of vaguely similar phenomena had a strict underlying unity. Perhaps they were each a manifestation of fundamentally the same kind of state or condition of nature. In this section I describe how **Michael Faraday** laid down criteria for 'underlying sameness' and then set about demonstrating, within the margins of precision allowed by experimental technique, that the apparently diverse kinds of electricities were manifestations of a common underlying 'something'. What that 'something' was he did not himself establish.

Young, T., 'On the theory of light and colours', *Philosophical Transactions of the Royal Society*, vol. 92, 1802, pp. 20–71.

Lohne, J. A., 'Experimentum Crucis', *Notes and Records of the Royal Society of London*, vol. 23, London, 1968, pp. 169 ff.

Manuel, F. E., *A Portrait of Isaac Newton*, Cambridge, Mass., 1968.

Sabra, A. I., *Theories of Light from Descartes to Newton*, London, 1967.

speed of the particles to be the cause of our experiences of colour, while Descartes thought it had to do with their rate of rotation. Eventually the problem was solved, at least relative to the known phenomena, by Euler. About the year 1746 he gave precise mathematical form to another rival theory that had been proposed, notably by the Dutch physicist, Huyghens. Euler showed that Newton's experimental results and many other phenomena could be elegantly explained by assuming that light was propagated as a wave in an all-pervasive medium, the luminiferous ether. Light was not to be thought of as a stream of particles, but as vibration in an elastic solid. Colours corresponded to waves of different wavelength. This explained why different colours were differentially refracted when they passed from one medium to another. The colours were not produced in the medium, as medieval physicists had thought, but at the boundary between media. Elegant though Euler's solutions were, they too have to be modified under the pressure of still more recondite discoveries about electromagnetic radiation of which light is only one rather special kind.

In most of the experiments preceding Newton's study of colour, the subject under investigation lay ready to hand in the common experience of mankind. Falling bodies, compressed gases, the rainbow and its accompanying drops of rain, even the developing chick, are all within the range of our senses. In the conclusion Gilbert drew from Norman's experiment a more subtle kind of being is proposed, something no human observer could ever experience. The *orbis virtutis* is the unobserved or 'occult' cause of observable magnetic effects. For all their apparent simplicity Newton's experiments on colour also go beyond experience, though not so deeply as

object with monochromatic light, and then looked at it through a prism. If the passage of light from the object to the eye through the prism had had any effect on the light then he should have seen some difference in the colour of the thing when so observed. 'But those illuminated with homogeneous light appeared neither less distinct, nor otherwise coloured, than when viewed with the naked eye.' Newton remarked that since the differences between the rays might really be continuous, light could not be perfectly homogeneous, no matter how sharply focused. But the spread of colours in each apparently homogeneous ray is so small that 'change was not sensible, and therefore in experiments where sense is the judge, the change ought not to be considered at all'. Truly homogeneous light cannot be produced by refraction. Modern lasers which do produce perfectly coherent light depend upon a different physical principle.

The final step was to examine a wide variety of substances, 'paper, ashes, red lead, gold, silver, copper, grass, blue flowers, violets, bubbles of water tinged with various colours, peacock's feathers and such like . . .' Under red light, they all appeared red. Under blue light they all looked blue, under green light, green and so on. Reflection, like refraction, has no effect on the colour of relatively homogeneous light.

The study of colour after Newton

But why are these results so readily and unambiguously obtained? Newton and Descartes before him had supposed that in some way or another the motion of particles was involved in the transmission of light. Newton considered the

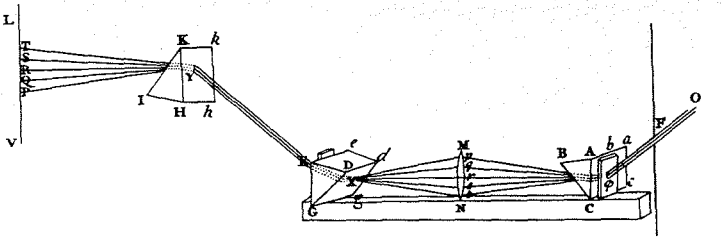

Fig.32. Decomposition, recomposition and decomposition of white light to the spectrum. Newton, *Opticks* (1721 edn), book I, part II, table iv, fig.16. Rays refracted by prism ABC are recombined optically by lens MN, and are reseparated by prism KIH.

produced in the process of refraction. However, in the *Opticks* Newton added another and very ingenious recombination experiment to refute this kind of objection.

By using a long, flat prism, Newton made the angle which separates the beams of coloured light very small. By altering the angle of a screen arranged as in Figure 32, colours can be produced from what looks like white light. When the screen is at position B, there is enough diffusion of light caused by dust particles in the air for the narrowly separated coloured beams to be mixed again. By altering the angle of the screen to position C the coloured beams are made to strike the screen at sufficiently separated places for a spectrum to be seen. The distance WZ, separating the points of contact of the red and blue beams with the screen in position C, is much greater than the distance XY separating the images from the red and blue beams when the screen is in position B. The only feature of the arrangement which varies is the angle of the screen. The separation of images is being brought about by manipulating

VIOLET RED

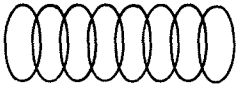

VIOLET RED

Fig.31. The effect of using light sources of different shapes.

repetition of the cruder experiments of his predecessors. Even the testing of monochromatic light by passing it through a second prism had been anticipated, albeit crudely, by J. M. Marci of Kronland. Marci was a prominent physician in Prague. Though isolated from contacts with Western scientists by the Catholic reaction in Bohemia in the early seventeenth century, he did important work in astronomy, optics and medicine. But though he succeeded in decomposing white light into coloured beams, it was to be left to Newton successfully to reconstitute the original beam.

But to demonstrate that the phenomenon of colours in refracted light is caused by the different refrangibility of rays already present in the white beam, and not by some modification produced in the light by the glass of the optical apparatus, something more is needed. Newton's original recombination experiment reported in the Letter of 1672 involved the use of a lens to bring about the confluence of the rays. The reactions of many of Newton's contemporaries to the experiment were tepid. Hooke objected that the experiment does not show that the light, prior to refraction, should be thought of as a collection of these different rays. They could have been

he says. Why should this be so? According to Lohne (see Further Reading), Newton must have tidied up his description of this image somewhat, since the greater intensity of the yellow component in the sun's light would have made the image rather broader at that point in the spectrum.

In preparing a definitive account of the experiment for the *Opticks*, Newton describes how he took pains to refine and sharpen the image. 'By using a larger or smaller hole in the window-shut [he] made the circular images larger or smaller at pleasure. The amount of light could be increased by using a narrow oblong hole rather than a circular one, keeping the ends of the spectrum image sharp.' Newton seems to have ignored or overlooked diffraction effects of the use of a small hole as image, though these had been noticed by his contemporaries.

The basic experiment, refined by the use of a lens to focus the image of the hole, was quite simple. The spectrum is thrown on a piece of black paper in which there is a small hole. When the hole coincides with the red part of the spectrum a beam of red light is obtained, which can be refracted through a second prism. Similarly when the hole coincides with the blue part of the spectrum a blue beam is separated out. It is the effect of the second prism that is the key. There are two results to be noticed. The resulting image, whatever its colour, is quite circular, 'which shows that the light is refracted without any dilatation of rays', since the shape of the hole is perfectly reproduced in the image. But when a blue ray passes through the second prism it is more refracted than a red ray. So the separation of the colours is a secondary effect. The underlying process is the separation of 'rays of different refrangibility'. In a letter to Lucas of 5 March 1677/8, Newton was at pains to emphasize the true result of the experiment. '... you think I

(1721 edn), book 1, part 1, table iv, fig 18. S is the source of white light. In prism ABC the rays of different refrangibility are separated. The screens DE and *de* serve to separate progressively purer colours.

way light was refracted when passing from one medium such as glass to another, such as air. Descartes was the first to separate light of pure colour using this effect. In *Les Météores* of 1637 he describes an experiment which he had performed in the course of studying the rainbow. The experimental arrangement is shown in Figure 20. 'When I covered one of these surfaces with a screen,' says Descartes, 'in which there was a small opening DE, I observed that the rays which pass through this opening and are received on a white cloth or sheet of paper, show all the colours of the rainbow; and that the red always appears at F and the blue or violet at H.'

What relation did these coloured rays have to the light from the sun which had fallen on the prism? It was to the answer to this question that Newton's experiment was addressed.

Newton's systematic research programme

Newton's series of more and more successful versions of the basic experiment to be described here was not original in conception, but it was to develop into a fairly exact execution. (For an account of the forerunners of Newton in the study of colour and refraction see J. A. Lohne, *Notes and Records of the Royal Society of London*, 20, 1965, pp. 125–39.) In his letter to the Royal Society of 1672, Newton tells of the puzzlement he felt, when in an experiment of 1666, he noticed that the shape of the spectrum image cast on a screen by passing light from a round hole through a prism, was oblong, 'with straight sides' as

for which had been done around 1666, was finally published only in 1704.

In 1689 Newton took his seat in the House of Commons as a Member for Cambridge. This event marked a considerable change in his interests, and some historians have suggested, in his character. He virtually abandoned scientific research from about this time, and enjoyed the life of a senior administrator and public figure. He became Master of Royal Mint and is said to have run it with exemplary efficiency. Throughout his life he had taken an intense interest in theological matters. Even in old age he was still trying to solve chronological problems in the dating of events recorded in the Old Testament. He died in 1727, having acquired a reputation in his own life-time that no other scientist was ever quite to have again.

Early work on light and colour

Is colour a quality of light produced *in* a body, or is it a quality separated out of light *by* a body? This seems a question of some profundity and its solution likely to be of great technical difficulty. The problem had a long history. Theodoric of Freibourg, whose masterly solution of the difficulties of understanding the rainbow we have studied above, was typical of medieval thinkers in generalizing a vaguely Aristotelian explanation. He thought that light acquired its colour from the medium through which it passed. His explanation is based upon the idea of pairs of contrary principles. A medium can be more or less translucent. Near the surface a medium is more bounded than it is in its depths. A mirror is perfectly bounded, and reflects all light, having no effect on colour. A transparent solid is unbounded, allowing light to penetrate deep into its

Christmas Day, 1642. His father had died before he was born, and his mother married again when he was only two. As a child he demonstrated his manual dexterity as he 'busied himself making models of wood in many kinds'. Most of his childhood was spent with his grandmother. He went away to school at Grantham, and then on to Cambridge in 1661, but not before he had tried his hand at farming without a great deal of enthusiasm.

Newton was very successful at Cambridge. He was elected to a minor Fellowship at Trinity College in 1667 and became a major Fellow in 1668. In 1669, at the age of twenty-six, he was elected to the Lucasian Chair of mathematics.

The Great Plague had closed the university in 1665, and Newton retired to his mother's farm at Woolsthorpe. His great productive period had begun in about 1664. The falling apple that sparked off his theory of universal gravitation is said to have come from one of the trees in the Woolsthorpe orchard. Between 1665 and 1667 he developed the method of fluxions (the calculus, as we now call it), carried out most of his experimental work on the nature and properties of light, and laid the foundations of the universal mechanics in which he synthesized the terrestrial science of Galileo with the planetary theory of Kepler. But he took many years to prepare these discoveries and inventions for publication. Newton was very sensitive to criticism, and the equivocal reception of his first communication to the Royal Society, on the nature of light, made him wary of publishing mere fragments of research. So we find him holding on to his discoveries until they could be worked up into massive treatises. The *Principia*, the great work in which he set out his mechanics and cosmology, did not appear until 1687. The *Opticks*, most of the experimental work

C

The Decomposition of an Apparently Simple Phenomenon

Bacon recommended that scientists should study 'the forms of simple natures'. By this he meant the most fundamental knowledge would be of the structural properties of matter responsible for the basic phenomena into which the world of experience could be analysed. At the beginning of the scientific investigation of any field it is vital to demonstrate experimentally which things are compound and which simple, relative to one's method of analysis. Sometimes the experimental work necessary to achieve this is difficult and its results controversial. **Isaac Newton** believed that he had given a final demonstration (*experimentum crucis*) that sunlight, though apparently homogeneous, was a mixture of rays of 'different refrangibility'. He thought that any other way of construing ordinary light was ruled out by the experiment to be described in this section.

The idea that the positive charge was spread through the region of space in which electrons were embedded soon gave place to Rutherford's nucleated atom with the positive charge concentrated in a central heavy nucleus and the electrons as planetary charges orbiting it. At the time of Thomson's major discoveries there was no idea of the quantization of energy, and many other physical parameters soon seemed to be called for to describe the internal architecture of atoms. There only remained the right thing to call these 'primordial atoms of material X'. Following a suggestion of G. H. Stoney, they were soon universally referred to as *electrons*.

Thomson was not just correlating phenomena, but actively seeking effects which would differentiate one 'picture' of the structure of matter from another, a corpuscularian or atomistic 'picture' from a world conceived in terms of ethereal waves.

Further reading

Plucker, J., 'On the Action of the Magnet upon the Electrical Discharge in Rarefied Gases', *The London, Edinburgh and Dublin Philosophical Magazine*, 4th series, vol. 16, 1858, pp. 119–35.

Thomson, J. J., 'Cathode Rays', *The London, Edinburgh and Dublin Philosophical Magazine*, 5th series, vol. 44, 1897, pp. 293–316.

Thomson, J. J., *Conduction of Electricity through Gases*, Cambridge, 1903.

Thomson, G. P., *J. J. Thomson and the Cavendish Laboratory of his Day*, New York, 1965.

Whittaker, E., *A History of Theories of the Aether and Electricity*, vol. I, London, 1951, pp. 348–66.

the smallness of m and the largeness of e. The latter was wrong. Since each cathode ray particle, it has turned out, electrically balances one hydrogen ion, their charges must be equal and opposite. So the correct conclusion to draw from the comparison of the ratios m/e for each is that the cathode ray is only 1,000th of the mass of the hydrogen ion.

But that was a minor blemish soon put right. The deep speculative conclusion Thomson drew from the experiment has determined the direction of physics ever since. Why is m/e independent of the kind of gas in the tube? Thomson's answer was to develop his sub-atom hypothesis. '... in the atoms of the different chemical elements are aggregations of atoms ... of some unknown primordial substance X ...' In the strong electric fields near the cathode the molecules of the gas are broken up, ionized as we should say, and release a few of their 'primordial atoms'. This conclusion can be confirmed from Lenard's result. He had found that the depths the primordial atoms could penetrate into a substance depended upon nothing but the density of the medium. If the molecule is a spatial arrangement of the subatomic corpuscles, collisions will be between corpuscle and corpuscle, not corpuscle and molecule. Thus collisions will be proportional to the number of corpuscles, primordial atoms, not to the number of molecules. But the number of corpuscles will be proportional to the ratio of the total mass to the volume, that is, to the density of the gas, and hence the mean free path (a measure of depth of penetration) should be inversely proportional to this, since the fewer corpuscles the further a corpuscle should go before collision.

Having made this step it is easy to turn to a theory of atomic architecture. 'This negative ion [his old "primordial atom" or

to be measured, with a corresponding increase in accuracy. The arrangement can be seen clearly in the figure.

Details matter in experiments, and one small detail had to be seen to in this one. The glow on the rounded end of the tube was too faint to be seen easily in daylight. 'As it was necessary', says Thomson, 'to darken the room to see the phosphorescent patch, a needle coated with luminous paint was placed so that by a screw it could be moved up and down the scale. Thus, when the light was admitted the deflexion of the phosphorescent patch could be measured.'

All kinds of variations were made in the materials used in the apparatus to make sure that the effect was due to something present in or evocable from any kind of material, that is a universal constituent of matter.

The results were as Thomson expected. The value of m/e turned out to be independent of the nature of the gas. And in keeping with the hypothesis that the cathode rays are streams of particles of subatomic dimensions the value of m/e turned out to be very small. In particular it was very small compared with the known value of the ratio for the hydrogen ion in electrolysis. In fact, if the value of m/e for the cathode rays is 10^{-7} units, that for the hydrogen ion is 10^{-4}. In short, if cathode ray particles and hydrogen ions have the same unit charge, e, cathode ray particles are 1,000 times smaller than hydrogen ions.

But as Thomson notes, 'the smallness of m/e may be due to the smallness of m, or to the largeness of e, or to a combination of these two.' There was an argument for smallness of size. Lenard had demonstrated the great penetrating power of cathode rays which suggested that they were smaller than molecules. In the event Thomson found arguments both for

high exhaustions there might be a chance of detecting the deflexion of the cathode rays by an electrostatic force.' It was the passage of the rays themselves that prevented their electric charge being detected. By ionizing the gas, as we would now say, the cathode rays effectively short-circuited the plates, and destroyed the electric field.

And indeed, Thomson did get just the effect he expected. With a very high degree of attenuation of the gas, using good pumps so that he had a near-vacuum, he found the deflexion. When the plates were connected up so that D was negative and E positive the rays were depressed below the horizontal, but when the plates were connected up the other way round the rays were raised. By pasting a scale on the rounded end Thomson could measure the deflexion, and he found that 'the deflexion was proportional to the difference in potential between the plates'. Unmistakably there must be an electrical effect between particles and the charged plates. Since he already knew from Perrin's experiment that the rays were associated with a negative charge, he had further confirmation that the rays were carriers of that charge in that the deflexion was away from the negative and towards the positive plate, whichever way round the particular plates were connected.

The heart of the experiment was the measurement of the ratios of the mass of the particles to their electric charge. This ratio was known for other material particles, particularly the charges on fragments of molecules (ions) which are found in solutions. In particular the ratio for the simplest of these bodies, the positively charged hydrogen ion, was well known.

Thomson devised various ways of measuring the ratio of mass to charge (m/e). Readers familiar with contemporary physics will be used to looking for the ratio e/m, but in fact

To set about proving his hypotheses Thomson had to show why Hertz had failed to get the expected effect. This was essential if one were to show that the cathode rays were indeed charged particles. It is worth noticing that Thomson did not accept Hertz's result as a disconfirmation or disproof of the particle hypothesis. Rather he used the particle hypothesis to infer that there was something wrong with Hertz's work.

The apparatus involves a cathode as a source of rays, and two metal plugs to act as slits to produce a good beam. Then by fusing wires into the glass it is possible to connect up parallel metal plates D and E to batteries to create an electric field between them. At the rounded end of the tube, a glow appears where the beam of cathode rays strikes the glass.

The first step was to deal with Hertz's failure to get a deflexion in the beam in passing through the electric field. Thomson puts it all very clearly. '... on repeating [Hertz's] experiment I first got the same result, but subsequent experiments showed that the absence of deflexion is due to the conductivity conferred on the rarefied gases by the cathode rays. On measuring this conductivity ... it was found to decrease very rapidly with exhaustion of the gas ... at very

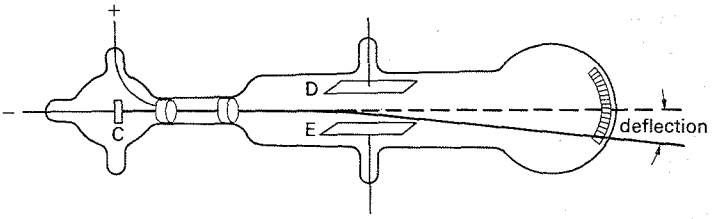

Fig.29. The experimental arrangement. C is the source of cathode rays.

a negative electric charge. He collected 'rays' in a metal tube. When the 'rays' were allowed to enter the tube it became negatively charged, but when he used a magnet to deflect them away from the entrance to the tube, it did not acquire any charge.

But the German group had been doing other experiments. Hertz, in particular, had found that the rays would pass right through thin films of metal, and that these films were not punctured by their passage. How could this fact be reconciled with the idea that they were a discharge of particles? He had also tried to deflect the rays by sending them through an electric field, between two parallel charged plates. But there was no deflection, as there should have been if the particles had been charged. They would have been repelled by the negative plate and attracted by the positive. The rays must be radiant phenomena, that is disturbances in the ether as light was then conceived. If that were so they could not be little 'things' carrying electric charge to Perrin's tube. Instead, they must cause a charge to appear there.

It was to this 'particle versus wave' controversy that Thomson brought his ingenuity for devising and interpreting experiments, and, not least, a determination to carry on a promising line of research in the face of apparently contradictory evidence. His first contribution was made in a report in the *London and Philosophical Magazine* of 1894, that the velocity of the cathode rays was very much less than that of light. This was a severe blow to any radiation theory, since all forms of electromagnetic radiation are propagated with the same velocity.

In a lecture to the Royal Institution of 1897 Thomson set out the ideas that lay behind the experiment to be described in the next section. They

of the time thought of electricity as a continuous fluid. Without a change in the metaphysical background of physics, the Helmholtz conclusion could not easily be drawn.

The demonstration of the atomicity of electricity turned out to be a long and difficult business. But an essential step in the story was the unravelling of the basis of the phenomena of electrical discharge in rarefied gases. It is to that story that Thomson's great experiment is relevant. We shall see that eventually it connects up most satisfyingly with Helmholtz's way of interpreting Faraday's Laws of Electrolysis.

When electricity is passed through very thin gases sealed in tubes, a great many luminous effects are produced, effects with which we are now familiar in the use of fluorescent tubes for lighting and decoration. It had gradually become clear that some kind of rays were being emitted by the cathode, the metal contact by which the positive pole of the electrical discharge is located in the tube. Davy had shown that an electric arc was deflected by a magnet. J. Plucker took the idea further and systematically tested the power of a magnet to deflect the 'cathode' rays. In his articles of 1858 he seems more interested in the aesthetic than the scientific aspects of his experiments. Shortly afterwards Hittorf demonstrated that the rays cast shadows. If something was put between the cathode and the glass wall of the tube, the glow which the rays produced in the glass was interrupted by the obstacle. The German scientific community had clearly begun to think of cathode rays as a kind of radiation, that is the gas discharges were thought of as ether waves, in the same way as nineteenth-century scientists interpreted light.

The controversy developed from the attempts to interpret two further experiments. Perrin had proved that the 'rays' had

During his 'reign' at the Cavendish, 'J. J.', as he was called, not only carried on his own experimental researches, but developed the idea of systematic programmes of research undertaken by groups of scientists. The use of the proceeds of the 1851 Exhibition to finance scholarships and the relaxation of the University's rules about entry of graduate students, permitting people with undergraduate degrees from elsewhere to start research, allowed Thomson to build up a powerful research school. The school not only advanced the subject, but provided trained men to fill chairs throughout the British Empire. The organization of science greatly interested Thomson, and he served on the founding committee of the Department of Scientific and Industrial Research, and as a member of its Advisory Council for eight years. It is said that he had considerable aptitude for finance, and he seems to have made sure that he was personally comfortably off. He was devoutly religious and attended church regularly.

In many ways he came to dominate the British scientific scene as Newton had in his time. He was awarded the Nobel Prize in 1906, and was President of the Royal Society from 1915 till 1920, directing its activities during the First World War. He became Master of Trinity College in 1918. He resigned his chair in favour of Ernest Rutherford in 1919, but continued in active scientific work. He died in 1940.

The atomicity of electricity; the problem before Thomson

The first hints that electricity might be atomic were already present in the results of Faraday's researches into electrolysis, though he did not himself grasp the point. In his statement of the laws of electrolysis, the process by which compound

keeping with the family's social aspirations he was educated at a private day school. His father hoped that the boy would be trained as an engineer, and had arranged an apprenticeship for him. But while young Thomson waited for a vacancy he began to study at Owen College, at the remarkably early age of fourteen. Shortly afterwards Thomson senior died. No money was available for the apprenticeship premium. Fortunately Thomson won a scholarship to continue his studies at Owen College. Here he came under the influence of the prominent scientists, J. H. Poynting and Sir Arthur Schuster. The latter was an experimentalist of skill, who had made important advances in the study of ionization and the discharge of electricity through gases.

In 1876 Thomson went up to Trinity College, Cambridge, again with a scholarship, to read the mathematical tripos. He had a most successful career as an undergraduate, and was elected a Fellow of his College in 1881. His early work was mathematical, using formal techniques to explore the utility of various mechanical models for electrical phenomena.

He was rather unexpectedly elected as Rayleigh's successor as Cavendish Professor of Experimental Physics, in 1884, though he had little practical experience. In the same year he was elected a Fellow of the Royal Society. He immediately began work on gas discharges, in the context of a long-running controversy between the German and British schools of opinion. The Germans favoured an ether wave theory, and the British a particle picture. This controversy was to lead to the experiments which I will be describing in the text.

Thomson married Rose Paget in 1890. They had two children, a boy and a girl. The boy grew up to be a distinguished physicist in his own right, G. P. Thomson.

the fixed alkalis, potash and soda, there seemed to be nothing but the metal and oxygen. But Lavoisier had thought that oxygen was the principle of acidity, and indeed that is what the word 'oxygen' had meant. However, says Davy, 'Oxygen then may be considered as existing in, and as forming, an element in all true alkalis; and the principle of acidity of the French nomenclature, might now likewise be called the principle of alkalescence.'

Electrolysis after Davy

Further developments of electrolytic methods of decomposition were mostly restricted to industrial applications. The separation of new elements became more and more a matter of chemical analysis. Great analytical sagas, like that of the Curies' separation of radium, were based on finding chemical reactions by which the differential solubilities of corresponding compounds of the elementary substances involved could be exploited to separate them.

If Lavoisier's experiments with oxygen were a case of 'cap-fitting', given the head find the right cap for it, Davy's could be thought of as 'bill-filling', given a prior prescription of what to expect (a light, active metal) how can we find something to fill it? The electrochemical theory had convinced Davy that light metals must be the bases of the oxides. And that theory dictated the means by which they might be released.

Further reading

Davy, H., 'The Bakerian Lecture', *Philosophical Transactions of the Royal Society*, Part I, 1808, pp. 1–44.

by his discovery that they did not react with naphtha), Davy made up samples of the new substances. He found that they were good conductors of heat and electricity. But though they resembled metals in all their major properties they were exceptionally light. Their specific gravity was actually less than that of water. They were chemically very active, particularly in reaction with water. He describes several experiments in which these substances seemed almost to be actively seeking out traces of water with which to combine. In a similar way they seemed to hunt oxygen. They would readily reduce, that is extract the oxygen from, other metallic oxides. After consulting the opinions of a number of philosophically minded persons, Davy decided that these 'bases' were indeed metals. He chose to call them 'Potasium' and 'Sodium'. He quickly altered the spelling of the former to our modern 'potassium'. The derivation of these names, he remarks, is 'perhaps more significant than elegant'. But they have 'the great advantage that whether changes occur in the theory of the composition of metals these terms will remain good, for all they mean is the metal derived from potash and from soda respectively'. Davy thought that one should be rather cautious in using terms that were redolent of theory, particularly at a time when discoveries in the electrochemical field were coming so thick and fast.

Caution, too, showed in his observation as to whether these were elementary substances. Probably they were, but all one could say was 'we have no good reason for assuming the compound nature of this class of bodies'.

One further conclusion of consequence could be drawn from the result of this experiment and the testing of the new metals and their chemical properties, and from the study of ammonium hydroxide. There was oxygen in all the alkalis, and in

'The potash began to fuse at both its points of electrification ... at the lower or negative surface, there was no liberation of elastic fluid [gas] but small globules, having a high metallic lustre, and being precisely similar in visible characters to quick silver, appeared, some of which burnt with explosive and bright flame, as soon as they were formed, and others remained and were merely tarnished, and finally covered by a white film which formed on their surfaces.'

At last in free form here was the substance he had been looking for, the 'basis' of potash. He soon showed that it was produced independently of the material of which the apparatus was made, so that it must be a constituent of potash. Soda exhibited an analogous result. What were these silvery globules?

When left in the air the metallic globules became covered with a white crust which proved to be potash re-formed again. In pure oxygen the potash crust was formed immediately, but unless water was present to dissolve it, the crust protected the substance underneath from further attacks by oxygen. All the evidence pointed to the simplest interpretation. The experiment had decomposed potash and soda into distinctive 'bases' and oxygen. Davy showed that it was oxygen and only oxygen that was released at the negative pole, while oxygen and

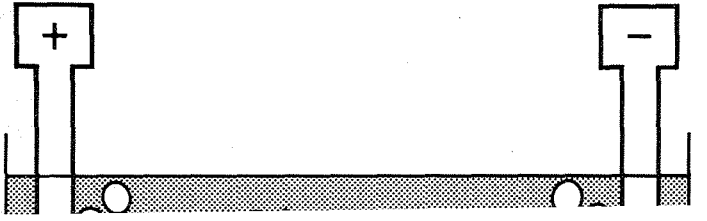

oxygene disengaged ... If the experiment failed, that is potassium metal did not appear when potash was dissolved in water, what would happen if no water was present at all? So he tried again with molten potash. By heating 'a platinum spoon containing potash, this alkali was kept for some minutes ... in a state of perfect fluidity'. The effects were spectacular. The spoon was connected to the positive side of the battery and the connection from the negative side was made by a platinum wire which was dipped into the molten potash. There was a bright light at the end of the negative wire and a column of flame rose above the point of contact. But when the polarity was reversed 'aeriform globules, which inflamed in the atmosphere, rose through the potash'.

It was clear to Davy that in these and similar experiments something special was being produced at the negative pole, but it could not be collected and preserved to be closely examined. 'I only attained my object', says Davy, 'by employing electricity as the common agent for fusion and decomposition.' In the experiments with the spoon the potash had to be heated by an external flame. Though solid potash is a non-conductor Davy found that only a little moisture was enough to make it a conductor. In that state it readily fuses and decomposes by strong electrical powers without the uncertainty of the effect of an external source of heat.

Eventually, by this last method, he succeeded. In his biography of Davy, Knight says Davy 'danced round the laboratory' when he finally succeeded in separating the globules. He put a small piece of potash, dampened only by a short exposure to the air, on a round, insulated dish of platinum which was connected to the negative pole of a battery. The positive side was connected to a platinum wire.

a kind of lackey, something which he never forgot or forgave. Returning to England in 1815 Davy was immediately confronted with the task of solving the problem of explosions in mines. From this came his famous Safety Lamp.

There seems little doubt that Davy was, as we should now say, 'into the drug scene'. His contacts among the poets, his own poetic ambitions, and his strongly romantic temperament all conspired to this effect. The visions described in his last but one book, *Consolations in Travel*, have a disconcerting familiarity to those who have read Casteneda and the like. Davy's health deteriorated rapidly in his middle age. After a stroke in 1827 he eked out the rest of his life in isolation and depression, moving from one European resort to another. He died in Geneva in 1829.

Electrolysis before Davy

In order for electrolysis, the decomposition of compound substances by electricity, to be a practical proposition, there had to be a readily available source of steady electric current. The birth of the idea of electrolysis and the development of the technical basis of the accumulator or battery came about together. The first step towards the discovery was Galvani's demonstration, in 1791, that electrical currents can produce muscular contractions. He noticed that a pair of frog's legs, hanging by chance in such a way that they were in contact with a junction between two dissimilar metals, twitched when the metals came into contact. In the years around 1800 Alessandro Volta carried through a systematic study of the excitation of muscular contraction and the production of electricity by the contact of dissimilar metals.

should now call an 'ionic' picture of electrical conduction in solutions. He was convinced that chemical affinity must have an electrical basis. Using his new methods he isolated not only potassium and sodium, but magnesium, calcium, barium, strontium, boron and silicon.

At that time Lavoisier's theory that oxygen was the basis of acids was still widely held. But Davy found that the oxides of his new metals were alkalis. Lavoisier's view of the role of oxygen in acidity must be astray. Part of the explanation, Davy thought, must be that the chemical properties of materials are due not only to the nature of their constituents, but to how these are arranged. By 1810 he had realized that oxygen was not a constituent of all acids. When hydrochloric acid was analysed it yielded hydrogen and another substance, erroneously thought to be an oxygen compound. Since no one, not even Davy, could break it down into constituents, of which oxygen might have been one, he concluded that it was indeed an element. And so it has proved to be. We know it as chlorine.

Davy had always been interested in the applications of chemistry and physics to industrial problems, and in 1812 he extended this interest by giving the first courses ever undertaken in chemistry for agriculture.

In 1812 he was knighted and immediately married Jane Apreece, a wealthy widow. She turned out to be a very demanding and tiresome woman, earning a great deal of animosity, not least from Michael Faraday, appointed Davy's assistant in 1813. In that year the Davys and Faraday set out on a continental tour, including a visit to Paris to receive a scientific medal from Napoleon, even though England and France were at war at the time. Lady Davy treated Faraday as

15. HUMPHRY DAVY

The Electrolytic Isolation of New Elements

Humphry Davy was born in Penzance, Cornwall, in 1778, the son of a somewhat indigent woodcarver. Davy's father died when he was a child, and his mother, Grace, supported the family by managing a millinery shop. In 1795 Davy was apprenticed to a surgeon. During his apprenticeship he threw himself into a massive project of self-education, including languages and philosophy as well as science.

Evidently this all had good effects, since in 1798 he joined Beddoes's Pneumatic Institute in Bristol, as supervisor of experiments. Beddoes was the centre of a wide circle of literary and scientific acquaintances, and there Davy met both Coleridge and Southey. The former became a very close friend, and was a great influence on Davy, particularly in introducing him to the philosophy of science of Immanuel Kant. A generally Kantian standpoint exerted a great influence on Davy's ways of theorizing. While at the Pneumatic Institute he worked on a systematic study of the medicinal and therapeutic properties of gases. In 1800 he published a book on nitrous oxide (laughing gas). The work was highly successful, and made his reputation. Most of Davy's early scientific writings involved attacks on 'substance' theories of physical action. Typically such theories introduced an unobservable material intermediary to explain the influence of [illegible]

covered dephlogisticated air. It seems that we are not dealing with a factual issue at all, but with testing for the appropriateness of rival conceptions used to marshal the known phenomena into good order. The existence of the 'stuff' is not in question.

Further reading

Lavoisier, A. L., *Essays on the Effects Produced by Various Processes on Atmospheric Air*, transl. T. Henry, Warrington, 1783.

Priestley, J., *Observations on Air*, London, 1774.

Geurlac, H., *Lavoisier – The Crucial Year*, Ithaca, N.Y., 1961.

Leicester, H. M., and Klickstein, H. S., *A Source Book in Chemistry*, New York, 1952, ch. 23.

McKie, D., *Antoine Lavoisier, the Father of Modern Chemistry*, Philadelphia, 1935.

colour of blood depends on the combination of dephlogisticated air?' This curious phrase, used instead of the more usual term 'oxygen', reflects Priestley's explanation of his discoveries. If, when oxygen seems to have been driven off from mercury calx by heating and the mercury is restored, then, in the topsy turvy world of phlogiston theory, the result is construed not as a release of oxygen, but as the absorption of phlogiston from the air. The result then must be dephlogisticated air.

The experiment I have described involved little effort at accurate measurement. It simply established the principle of combustion. Lavoisier also attempted quantitative studies of combustion, and given the crudity of the equipment they were of surprising accuracy. By measuring the amount of air that was required to make up for that absorbed during calcination by letting air into a closed retort after it had cooled, he was able to estimate the weight of the air absorbed. In these experiments he used a different metal (tin). By weighing the tin before and after calcination he was able to calculate how much oxygen had been 'fixed' in forming the calx, or oxide. The results were not convincing by modern standards. However, they did show that the loss in weight of the air and the gain in weight of the tin as it turned to calx were compatible with the hypothesis that the same amount of oxygen was lost from the air as the oxide gained.

Further studies of the chemistry of oxygen

The development of the chemistry of gases after Lavoisier involved refinement rather than radical revision of the genre of experiments that had been begun by Mayow, refined by

be allowed, than common air: it should appear as proved that, in the preceding experiment, the mercury, as it calcined, had absorbed the best and most respirable part of the air, and left the mephitic or unrespirable part.' Now all that was left to do was to regain the absorbed air and restore it to the mephitic residue. And this is what Lavoisier did. 'I carefully collected the forty-five grains of calcined mercury which had been formed in the preceding experiment; and putting it into a very small glass retort, the neck of which was turned up so as to pass under the edge of a bell glass, filled with and inverted into, water, I proceeded to reduce it without addition. By this operation I recovered nearly the same quantity of air which had been absorbed during the calcination ... when recombined with the air which had been vitiated by that process [it] restored the latter, pretty exactly, to the same state in which it had been, previous to the calcination being performed on it, viz. that of common air.'

It seems, as one might say, that that settles that! There were one or two further steps to make. To bring together oxidation and respiration makes one theory. To this end Lavoisier studied the process of respiration somewhat more closely. He demonstrated that 'the respired air, vitiated by respiration, contains nearly 1/6 of an aeriform acid, perfectly similar to that obtained from chalk', showing that in the process of respiration respirable air was absorbed and, as we should say now, carbon dioxide was given out. But some speculations went awry. Here is one: 'These metals form, with highly respirable air, beautiful red calxes ... may we not then suppose that the red

sentiments of the case are different, and I have already given some proof that the residuum of atmospheric air, after combustion, is its mephitic portion, which forms three fourths of its composition, deprived in a greater or less degree of its pure, respirable part.' The experimental test of this view, which would at the same time refute Priestley's ideas, would be to fix the respirable portion by calcination, and then extract it from the substance with which it had combined, and finally restore it to the gaseous residue. If this produced ordinary air again the case would be made. '... if, as Dr Priestley supposes, this air [the residual air] were contaminated by some principle which rendered it unsalutary, it would not be sufficient to restore to it the portion of which it had been deprived, but in order to reestablish it in the state of common air, it would be necessary also to separate this contaminating substance from it.'

By a nice irony Lavoisier chose the very same method for the restoration of the lost portion of air that Priestley had used to prepare his pure air, namely the heating of mercuric oxide. But the trick was this: that very mercuric oxide had been itself the product of the slow combustion of mercury in the air sample which was being studied.

The experiment itself Lavoisier describes as follows: 'In a convenient apparatus, which it would be difficult to describe without the aid of engravings, fifty cubic inches of common air were inclosed, to which I introduced four ounces of very pure mercury, which I proceeded to calcine [oxidize] by keeping it, during twelve days, in a degree of heat almost equal to that which it is necessary to make it boil. ... on the twelfth day, having extinguished the fire and suffered the vessels to cool, I observed that the air which they contained was diminished ... by about 1/6 of its

with more splendour and heat . . .' than in other airs. He tried breathing it, and found it excited an agreeable stimulation. 'Who can tell', he remarks, 'but that, in time, this pure air may become a fashionable article in luxury. Hitherto only two mice and myself have had the privilege of breathing it.'

But, alas, Priestley quite misinterpreted his discovery. He did not follow Mayow's line of thought, that would have led him to identify his 'factitious air' with the respirable part of the atmosphere. He, like Hales, was an adherent of a theory, though a different one, which directed him to interpret these results in quite another way. He believed in the phlogiston hypothesis, the theory that during combustion and respiration a substance (phlogiston) was given out 'which alters and depraves [the air] as to render it altogether unfit for inflammation [and] respiration'. Since he also believed that atmospherical air is a simple, elementary substance, he had to interpret his discovery as the preparation of an air that contained less phlogiston than atmospheric air, so rendering it more fit for supporting combustion and respiration than the atmosphere. 'We can make', he concludes, 'air purer than atmospheric air, that is dephlogisticated air . . . containing less phlogiston than the air of the atmosphere.'

The experiment

Lavoisier's resolution was simple. He revived, though I think it likely he did not know of it, Mayow's idea that air is a mixture of two 'airs' or gases, one of which is respirable and supports combustion, and the other 'mephitic', unable to support life. In commenting on Priestley's theory and the interpretation of the chemical facts it encouraged, he says, 'My

him. He was arrested and tried, along with other Fermiers. His trial was famous for the apocryphal remark, 'The state has no need of intellectuals.' Whether this doctrine was really advocated or not he was found guilty of conspiracy and executed in 1794.

The problem before Lavoisier

The phenomenon of combustion had been linked to the study of the composition and nature of the air for at least 100 years before Lavoisier's experiments. The essential step had been taken by John Mayow somewhere about 1673. Mayow (1643–1679) systematically studied the diminution of air caused by combustion and respiration, and explained it by the idea that air was a mixture of distinctive particles, one kind of which were absorbed in combustion. In his *De sal-nitro et spiritu-nitro-aereo*, printed in a collection of works called the *Tractatus quinque medico-physici* published at Oxford in 1674, he concludes, '... the air contains certain particles termed by us ... nitro-aerial which are absolutely indispensable for the production of fire, and that these in the burning of flame are drawn from the air and removed, so that [it] ceases to be fit for supporting fire'. Mayow believed that these particles were also responsible for the elastic force of the air, and hence in their absence the air was more easily compressible, diminishing in volume.

Unfortunately, when Stephen Hales set about repeating and extending these studies about 1724, he picked up the point about elasticity and abandoned the theory of distinctive constituents of gases. He explained the effect of burning a candle in a restricted quantity of air by the hypothesis that the

mother died while he was still a child, and he was brought up by an aunt. He was educated at the Collège Mazarin, and took his Baccalaureate in 1763, and Licentiate in 1764. Lavoisier managed to pursue two quite distinct careers with a good deal of success. He entered the Civil Service, or what corresponded to it, as a collector of taxes. But from an early age he also pursued scientific studies with characteristic thoroughness and energy. He was confirmed as a member of the Academy in 1769, after a disputed election, and became a salaried member in 1778. He was equally successful as a tax collector and became a Fermier General, the head of a section of the tax collecting system, in 1780.

The quality of his work was widely recognized in his own time, and he was elected to the Royal Society in 1788. The English connection of his work was very strong since he was effectively extending and rivalling the studies of gas chemistry inaugurated by Cavendish and developed by Priestley. In 1771 he married Marie-Anne Paulze. She was a competent linguist, particularly in English, and assisted him materially by translating his work into English and the works of English authors into French. She survived him, to marry Count Rumford, the extraordinary scientific adventurer, known for his observations on heat while he was superintending the boring out of the barrels of Prussian cannons. Berzelius described the formidable way Baroness Rumford presided over a scientific salon, when he visited Paris long after Lavoisier's death.

After the Revolution of 1789 Lavoisier worked for the new state. He was a member of the commission that planned and managed the introduction of the metric system. But the taint of having been an instrument of the old order, and in particular part of its most iniquitous arm, the tax farmers, hung around

B

Existence Proofs

In general, scientific knowledge comprises a catalogue of the things and substances we believe to exist at some historic moment, and the laws of their behaviour. An important class of experiments is concerned with the testing of putative candidates for inclusion in the current catalogue. In the first example, where we examine **A. L. Lavoisier**'s 'discovery' of oxygen, the question of whether there was a material basis of combustion was not at issue. Mayow, Scheele and Priestley had all more or less clearly demonstrated that. The experiment served to locate the substance, oxygen, in the correct and proper category of beings. We could call this kind of experiment 'cap-fitting'. **Humphry Davy**'s decomposition of the alkalis revealed a new kind of substance, prepared for by theory, but not previously isolated. We could call this kind of experiment 'bill-filling'. **J. J. Thomson** succeeded in both aspects of an existence proof – he identified a novel kind of being, the ultimate material unit of electricity, and located it in the appropriate category – a novel category developed for just this purpose.

the retinal image is a misconception ... motion *in* the retinal image, change of pattern, is not displacement with reference to the retina.' In perceiving visually the retina is displaced *over* its image, exploring it. For a human being to see, the eye-ball must vibrate some 50 times a second, 'visual tremor' as it is called. This ensures that the fovea, the spot of greatest visual sensitivity, rapidly scans the image, exploring it for higher-order invariants, that is for constant ratios and proportions. By shifting our mode of thought about the relation between image, retina and fovea, the facts, which were well known, fall into an intelligible pattern. We can understand the point of the visual tremor, once we cease to think of the retinal image as moving over the retina, but of the retina running over and exploring the visual image.

Gibson's pioneering work has led to the definition of a new field of study, ecological optics. This is the investigation of the way the orientation of the body, conceived as an exploratory system, and the visual system centred in the eye co-operate in the active exploration of the energy flow that bathes the human organism, searching that flow for invariants. There are many invariants in the stream of energies, but the human perceptual system seeks only those which have, over hundreds of millions of years, proved valuable in survival of organisms to maturity. These are the invariants which are coordinate with the solid geometry of the sources of much of that energy flow, the material things of the world. Perception is not based on the structure of light as it falls upon the retina, the erroneous theory of the passive, sense-datum theory, but on continuous modifications brought about by retinal movement which co-operates with body posture to reveal its invariants.

One of Gibson's more remarkable discoveries, coming out of

somehow determines the perception of shape. The most economical account of why that might be is just the idea of the perception of invariants. Throughout the changing sensations in the skin the geometrical properties of the shape of the cutter would be the only constants represented through certain invariances in ratios and proportions of sides and angles as the cutters were rotated.

'Tactual perception', says Gibson, 'corresponds well to the form of the object when the stimulus is almost formless, and less well when the stimulus is a stable representation of the form of the object. ... the role of exploratory finger movements in active touch would then be to isolate the invariants ... in the flux of sensation.'

In this simple experiment Gibson demonstrated that active exploration, not passive reception, is the essential process in the way we perceive the things in the physical world.

Later work

Gibson continued his studies to include all the sensory modalities, including that which most interests men, the visual senses. How did Gibson resolve the paradox of the perception of motion, a paradox referred to at the beginning of this section? When the image cast by the lens of eye on the retina moves because of the motion of the observer the world seems to stand still, but when the same retinal motion is produced in a stationary observer by the movement of something in the world, it is the thing in the world that is perceived as in motion. At the back of the paradox, Gibson pointed out, is a philosophical confusion, a muddle about concepts. 'Motion *of*

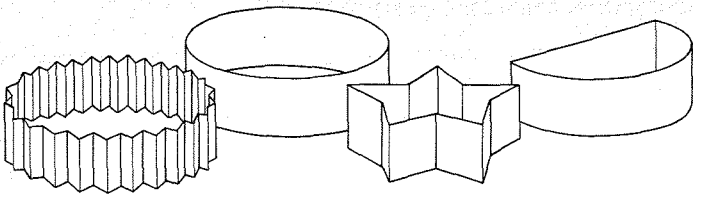

Fig.26. Cookie-cutters, of the kind used by Gibson in his experiment.

perceptual organ or system, the hand and its arm. Changing skin stimulation patterns and changing joint orientations help the active human agent as observer and explorer of the world to identify invariants of structure.

Here we have a variety of shapes, each distinguished geometrically from the others by numbers and dimensions of vertices, angles and sides. In the first experiment the shapes were pressed on to the skin of the hand with a standard pressure. This was the passive condition, with the participant's hand held still and without him being able to see what was going on. In this condition the participants could manage correct identifications of the cutters in 29 per cent of the cases. But in the active condition the participant was permitted to explore the shape in any way he liked. He was able to move his fingers actively to bring about a relative motion between the sensitive skin and the object. At the same time the active exploration altered the orientation of wrist and hand and finger joints. In the active condition participants were right in 95 per cent of cases.

This might seem a knock-down demonstration, but a subsidiary experiment was required to eliminate a residual possibility. In the passive condition the hand was held palm

clients always researched the passive rather than the active senses, a tactic based upon Müller's Law – that each excited nerve has a specific conscious quality – and the assumption that perceptions are constructed from sensations, one to each excited nerve.

But when the senses are considered as perceptual systems, for example when the hand is considered as a *system* consisting of sensitive skin, moving fingers and wrist, with receptors in the joints that register movement, environmental invariants can be detected through continuously changing sensations which stimulate neural *structures* corresponding to invariant structural properties of the things and movements perceived. A very simple experiment that the reader can easily undertake for himself demonstrates this. As one moves one's head from side to side, the world is perceived as stationary, but it is quite clear that the images on the retina at the back of the eye that are cast by the moving lens must be changing in both shape and position. Yet the world is perceived as stationary. But when a moving thing passes the head, and the head is relatively stationary, there might be very similar changes in the images cast on the retina, but now the thing in the world is seen to move, and the head is accepted as the stationary frame of reference. This distinction in perception cannot be based on what is happening to images cast on the retina. The great cookie-cutter experiment carries this thought one stage further and applies it to the field of tactile experience, the way one feels the shapes and textures of things with one's hands.

To demonstrate that tactile perception of shape does not come about by adding up patterns of stimulus on the skin, the cookie-cutter experiment was devised. The experiment shows that the perception of shape is the product of the active use of a

discovery ought to have alerted psychologists that there was something radically wrong with the assumptions which had engendered the traditional methods. Psychology is the most conservative of all scientific specialisms, and not surprisingly workers involved in the study of perception continued essentially the same kind of experiment as had been initiated in the late nineteenth century. The breakthrough came in a series of studies which went to the heart of the matter, by querying the very assumptions upon which the methods used in the old work had been based.

Gibson's hypothesis

The old theory could be summed up as follows: 'When the senses are considered as channels of sensation, one is thinking of the passive receptors and the energies that stimulate them . . . it does not explain how animals and men accomplish sense-perception' (J. J. Gibson, *The Senses Considered as Perceptual Systems,* p. 3). The basis of the new theory is a simple but deep observation that while many changes in stimulus energy occur as an organism moves about its environment certain 'higher-order variables' of stimulus energy, that is certain ratios and proportions, do not change. As Gibson noticed, 'these invariants correspond to permanent properties of the environment'. If this is the case, perhaps it is the *change* of sensations engendered by the organism moving about and changing the orientation of its sense organs to some of the fixed features of the physical world that is the major activity needed to produce perception. On this basis Gibson formulated a new theory. 'The active observer gets invariant perceptions despite varying sensations . . .' 'The

perception, such as the retina in the eye, were thought to be mere receptors of stimuli. The psychology of perception was not concerned with the relation between things in the world and human experience, but with the relation between the effects of the thing perceived on the sense organs and the thing as perceived. Boring, summing up the trend of research from about 1870, remarks, 'the stimulus has, in general, migrated from the external world to the retina ... the nature of the proximal stimulus at the retina can be predicted and used as the independent variable in experimentation.' It was also supposed that the act or process of perception consisted in the integration of sensory elements into some kind of whole, the thing-as-perceived. In the philosophical version of the basic theory of perception, the doctrine called the sense-datum theory, things as perceived were said to be logical constructions out of sense-data. In traditional epistemology perception was thought of as an ordering of sensations or sensory elements as these made up organized visual, auditory or tactile fields. A tomato-as-perceived was supposed to be a kind of organized sum of red patches of differing shades and tones co-present with tactile, gustatory and other sensations.

The method for experimental study of perception followed from these assumptions. An experimenter should maintain a 'subject' in as passive condition as possible, including physically constraining him, so that he becomes a pure receptor. The presumed components that make up the total perception are added one by one. The results of this programme of research were both equivocal and alarming. A subject held in a rigid frame, and so in a completely passive state, not only did not perceive the world as a world of things, but after a short time stopped perceiving anything at all. This extraordinary